TCB SERIES DIMENSIONS

WEIGHT	20 LBS
LUBRICATION	16 OZ UDOR LUBE

Dimensional Drawings are Shown in Millimeters. To Convert to Inches, Multiply Dimension x 0.03937

TCB SERIES PUMPS - 24MM SOLID SHAFT

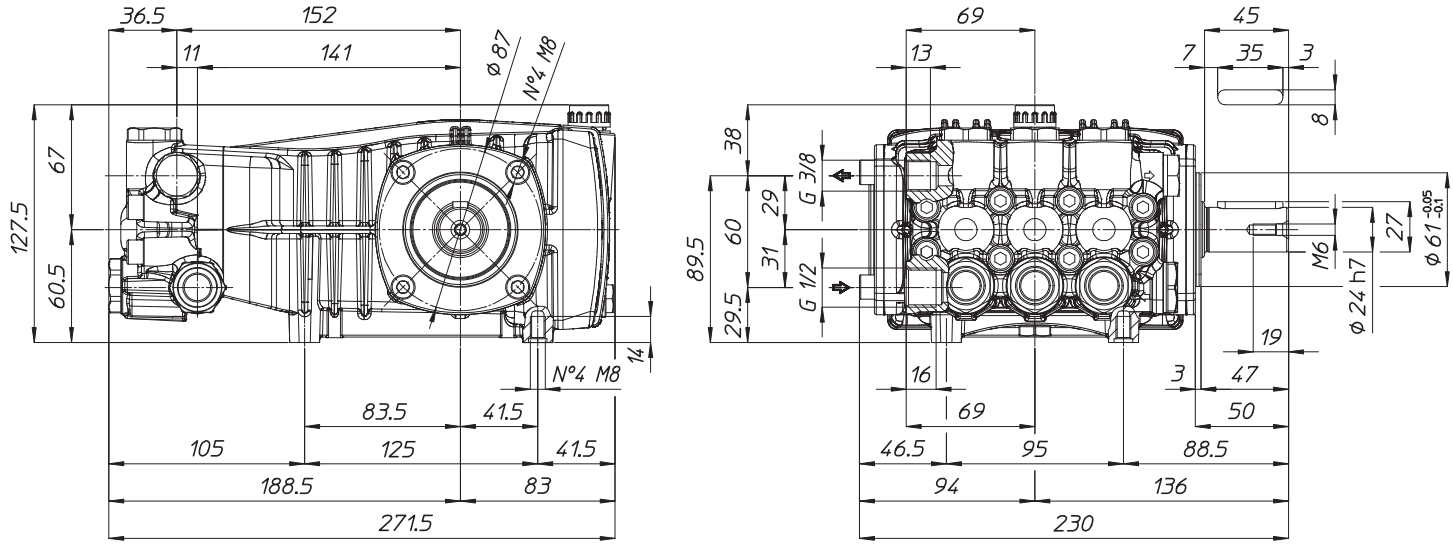

TORQUE SPECS

Ref.	Description	Ft./lb.	Nm	Loctite®
1	Head Bolts	19	25	-
2	Valve Caps	75	100	243
3	Inlet Cap	75	100	243
4	Outlet Cap	60	80	243
5	Bearing Flange Bolts	19	25	-
6	Rear Cover Bolts	19	25	-
7	Connecting Rod Bolts	9	11	243
8	Plunger Bolts	11	15	270
9	Valve Cover Bolts	-	-	-
10	Oil Drain Plug	19	25	-

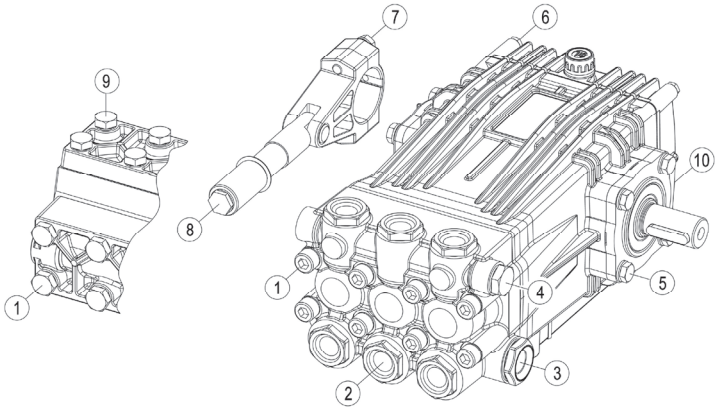

TCB SERIES DIMENSIONS

WEIGHT	23 LBS
LUBRICATION	16 OZ UDOR LUBE

Dimensional Drawings are Shown in Millimeters. To Convert to Inches, Multiply Dimension x 0.03937

TCB SERIES PUMPS - 1-1/8" HOLLOW SHAFT w/ 182/184 FLANGE

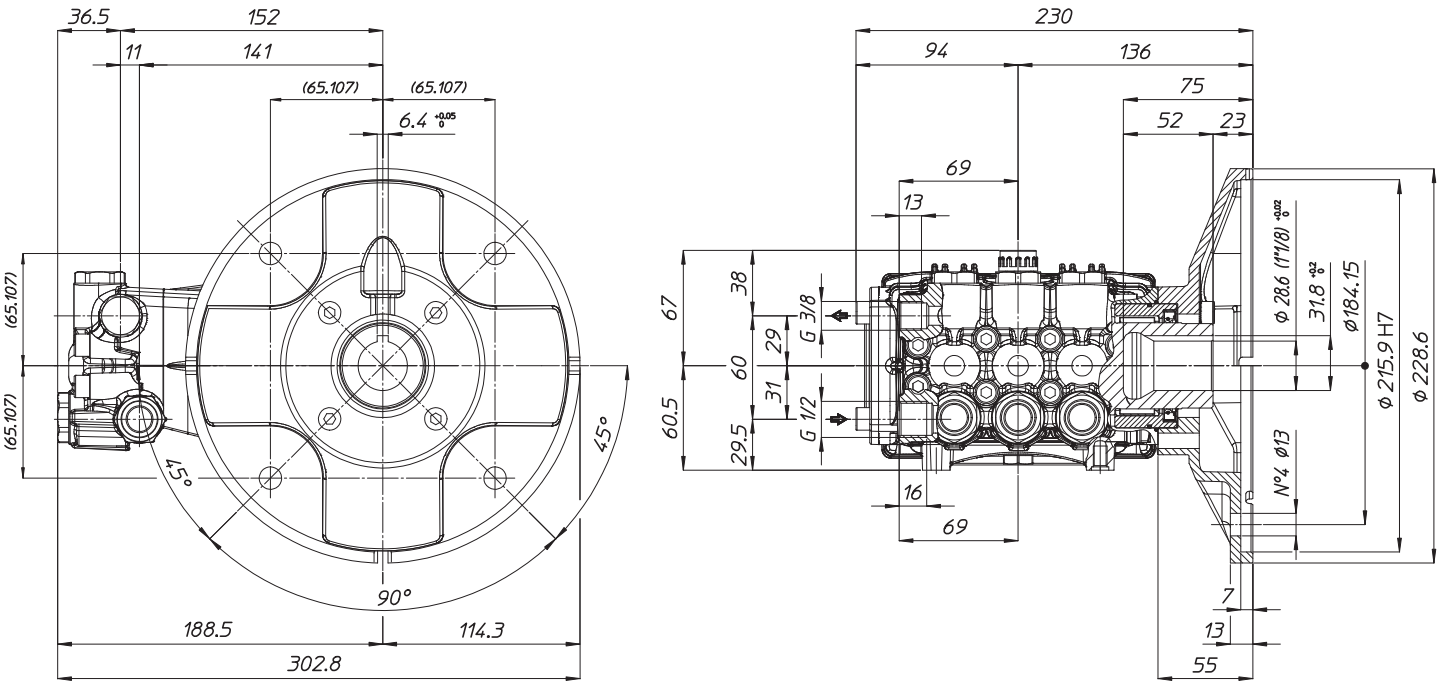

TORQUE SPECS

Ref.	Description	Ft./lb.	Nm	Loctite®
1	Head Bolts	19	25	-
2	Valve Caps	75	100	243
3	Inlet Cap	75	100	243
4	Outlet Cap	60	80	243
5	Bearing Flange Bolts	19	25	-
6	Rear Cover Bolts	19	25	-
7	Connecting Rod Bolts	9	11	243
8	Plunger Bolts	11	15	270
9	Valve Cover Bolts	-	-	-
10	Oil Drain Plug	19	25	-

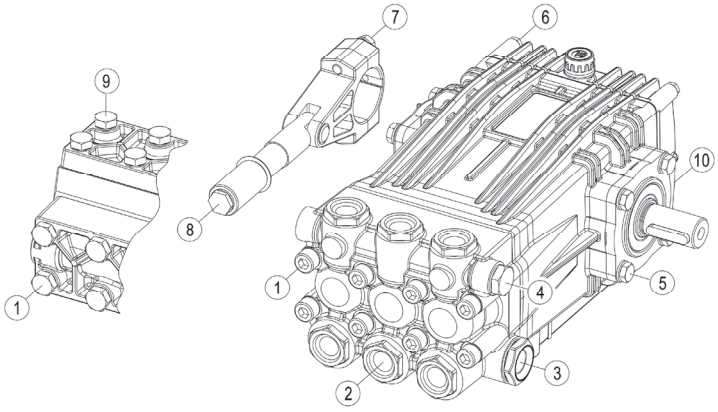

TC SERIES DIMENSIONS

WEIGHT 36 LBS
LUBRICATION 35 OZ UDOR LUBE

Dimensional Drawings are Shown in Millimeters. To Convert to Inches, Multiply Dimension x 0.03937

TC SERIES PUMPS BELOW 9 GPM

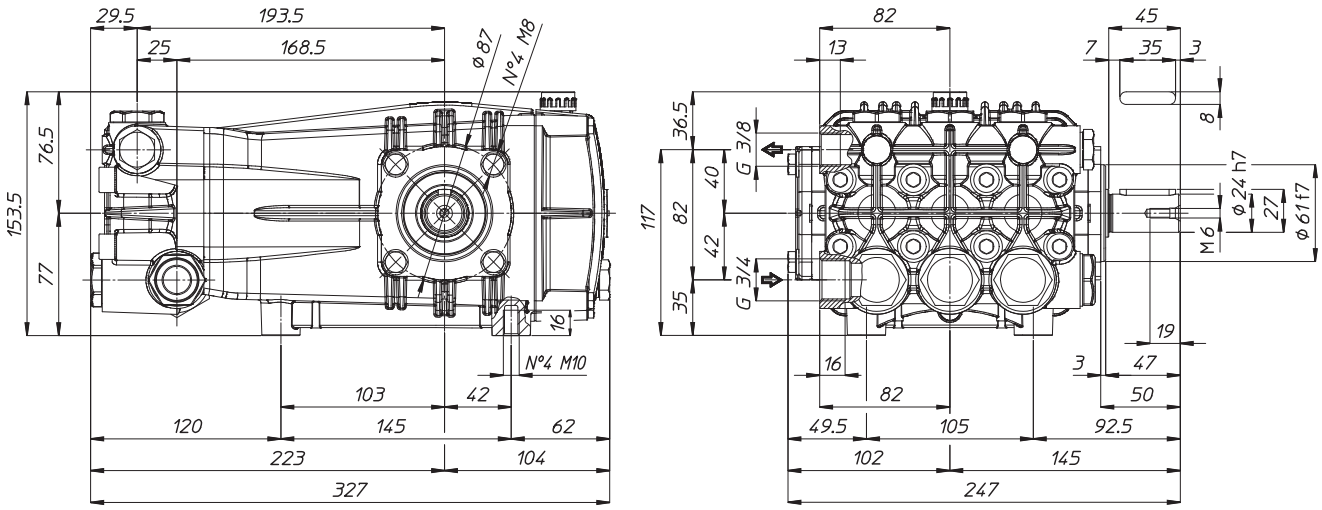

TORQUE SPECS

Ref.	Description	Ft./lb.	Nm	Loctite®
1	Head Bolts	37	50	-
2	Valve Caps	103	140	243
3	Inlet Cap	103	140	-
4	Outlet Cap	103	140	243
5	Bearing Flange Bolts	19	25	-
6	Rear Cover Bolts	8	11	-
7	Connecting Rod Bolts	19	25	270
8	Plunger Bolts	15	20	270
9	Valve Cover Bolts	-	-	-
10	Oil Drain Plug	8	11	-

