

T20F-P

MECCALTE spa - Via Roma, 20 - 36051 CREAZZO (VI) ITALY
Tel. +39 0444/396111 - Fax +39 0444/396166 - e-mail: info@meccalte.it
website: www.meccalte.com

3 PHASE
2 POLE
IP 23

CHARACTERISTICS

POWER 230/400 V at 3000 RPM - 50 Hz

Type	CL. H (ΔT=125°C)						CL. F (ΔT=105°C)		CL. H (ΔT=125°C)		T.H.D.
	THREE-PHASE		MOTOR STARTING CAPABILITY	EFFICIENCY			THREE-PHASE		SINGLE-PHASE DELTA CONNECTION		
	KVA	KW cos φ 0,8	KVA	2/4 %	3/4 %	4/4 %	KVA	KW cos φ 0,8	KVA cos φ 1	MOTOR STARTING CAPABILITY KVA	%
T20FS-130	**10**	8	40	78	82,1	81,5	9	7,2	6,5	25	< 5
T20FS-160	**12,5**	10	45	78,5	82,5	82	11,5	9,2	8,5	32	< 5
T20F-200	**15**	12	54	79,1	83,1	82,6	14	11,2	10	38	< 5

POWER 277/480 V at 3600 RPM - 60 Hz

Type	CL. H (ΔT=125°C)						CL. F (ΔT=105°C)		CL. H (ΔT=125°C)		T.H.D.
	THREE-PHASE		MOTOR STARTING CAPABILITY	EFFICIENCY			THREE-PHASE		SINGLE-PHASE DELTA CONNECTION		
	KVA	KW cos φ 0,8	KVA	2/4 %	3/4 %	4/4 %	KVA	KW cos φ 0,8	KVA cos φ 1	MOTOR STARTING CAPABILITY KVA	%
T20FS-130	**12**	9,6	48	79,5	83,5	83	10,8	8,6	7,8	30	< 5
T20FS-160	**15**	12	54	79,5	83,8	83,5	13,8	11	10,2	38	< 5
T20F-200	**18**	14,4	65	80,1	84,1	83,8	16,5	13,2	12	45	< 5

Type	J (Kgm²)		Weight (Kg)			Air Volume (m³/min)		Noise dB(A) 50 Hz		Noise dB(A) 60 Hz		COUPLING DISCS	
	B3/B14	B3/B9	B3/B14	B3/B9	MD35	50 Hz	60 Hz	1m dBA	7m dBA	1m dBA	7m dBA	SAE N°	J(kgm²)*
T20FS-130	0,0241	0,0231	45,7	44,7	48,7	4,7	5,7	81	63	83	65	6 1/2	0,0082
T20FS-160	0,0288	0,0277	52,7	51,7	55,7							7 1/2	0,0098
T20F-200	0,0335	0,0323	60,5	59,5	63,5								

*The J value of form MD35 is obtained by summing the J of the B3/B14 form with the J of the chosen SAE coupling discs.

Type		TS20FS-130	TS20FS-160	T20F-200
Rating "H" class	kVA 50 Hz	10	12,5	15
Direct axis synchronous reactance	Xd %	403	381	322
Direct - axis transient reactance	X'd %	45	43	38
Direct - axis subtransient reactance	X''d %	25,6	24,1	22,2
Quadrature - axis synchronous reatance	Xq %	125	115	105
Quadrature- axis transient reactance	X'q %	125	115	105
Quadrature-axis subtransient reactance	X''q %	50,5	48,6	46,6
Negative - sequence reactance	X_2 %	27,3	25,5	21,5
Zero sequence reactance	Xo %	10,1	9,6	8,2
Transient time constant	T'd (ms)	54	51	43
Subtransient time constant	T''d (ms)	11	10	9
Armature time constant	T α (ms)	6	7,5	9
Open circuit time constant	T'do (s)	0,65	0,58	0,5
Short - circuit ratio	Kcc	0,63	0,53	0,61
Stator winding resistance	Ω	0,729	0,453	0,362

REGULATOR	PARALLEL DEVICE	THERMAL PROTECTION			HEATERS	MECHANICAL PROTECTION		
COMPOUND TRANS.		PTC	BIMET DEVICE.	PT100		IP21	IP23	IP45
●		☐	☐	☐	☐		●	☐

● = Standard ☐ = Optional

Member of CISQ Federation
CERTIFIED MANAGEMENT SYSTEM
ISO 9001 - ISO 14001
ISO 45001

INSULATION SYSTEM

OVERALL SIZE, STANDARD TYPE

dimensions in mm.

FORM B9/25.4

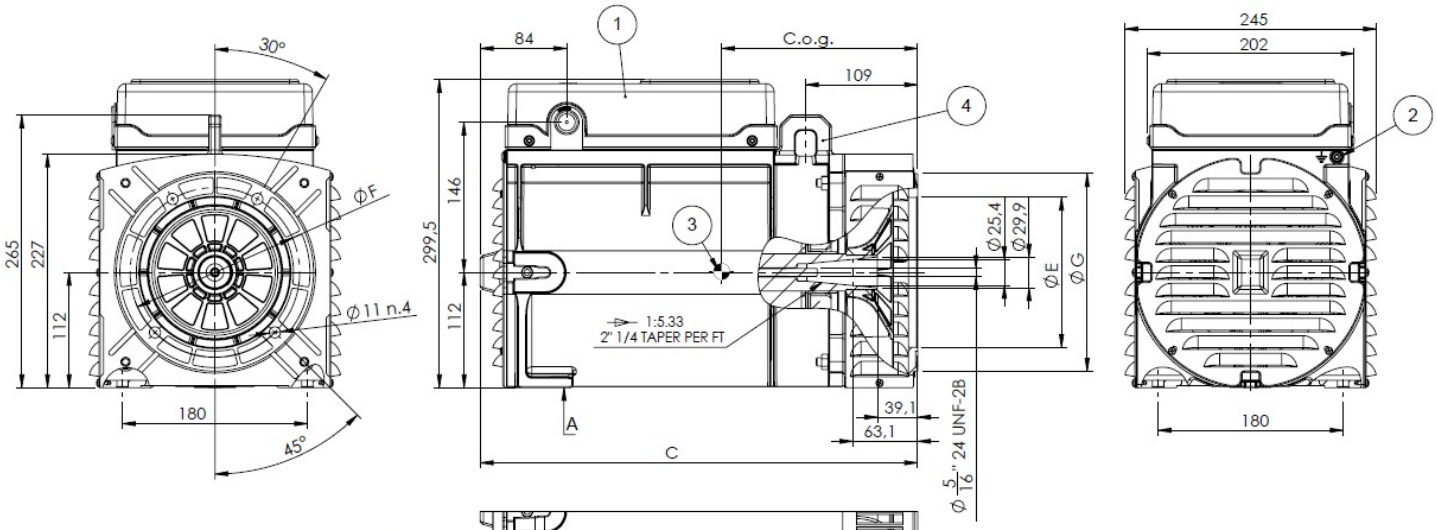

TYPE	A [mm]	B [mm]	C [mm]	D [mm]	C.o.G. [mm]
FS - 130	285.5	295.5	385.6	275.0	206.8
FS - 160					195.3
F - 200	325.5	335.5	425.6	315.0	215.5
(*) F - 230					227.6

FLANGE		
E [mm]	F [mm]	G [mm]
146.0	165.00	192.0
163.6	196.85	216.0
177.7		

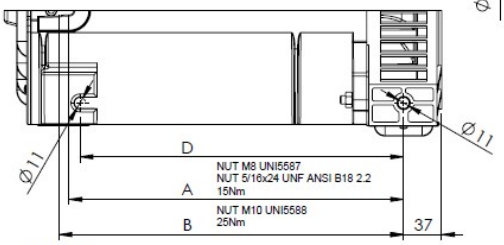

VIEW A

(*) AVAILABLE ONLY FOR S20F-P

1)	REMOVABLE COVER FOR ACCESS TO MAIN TERMINALS
2)	SCREW FOR GROUNDING
3)	CENTER OF GRAVITY (C.o.g.) IN CONF. S20F AND FLANGE Ø146mm
4)	LIFTING EYE - AVAILABLE ONLY FOR TYPE "F"

FORM B9/C30

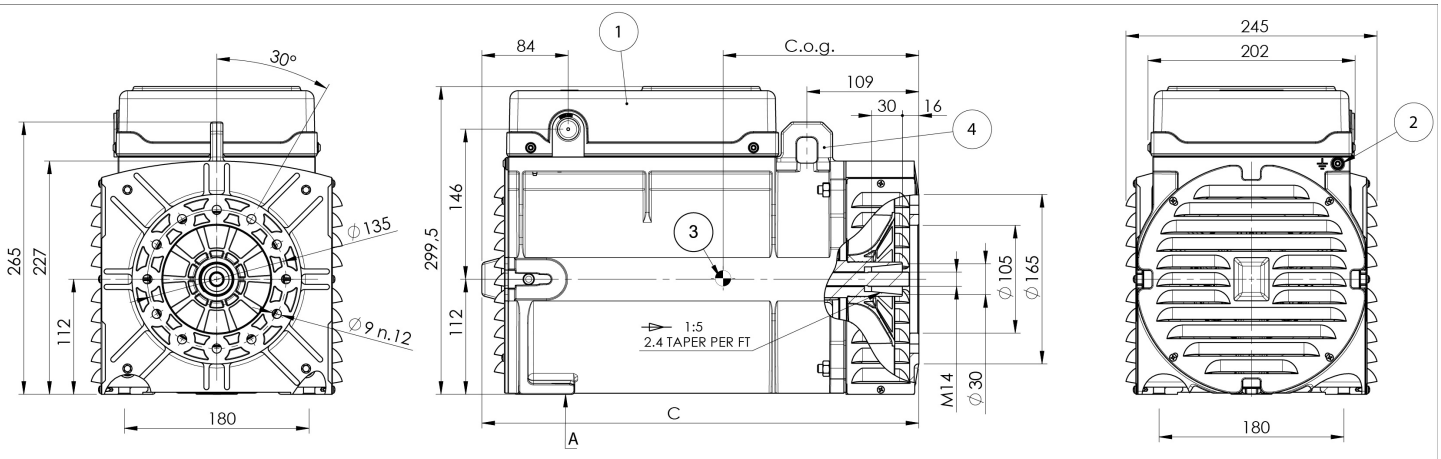

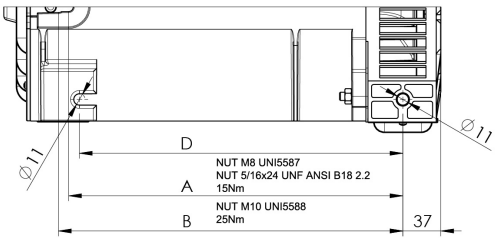

VIEW A

(*) AVAILABLE ONLY FOR S20F-P

TYPE	A [mm]	B [mm]	C [mm]	D [mm]	C.o.G. [mm]
FS - 130	285.5	295.5	385.6	275.0	205.4
FS - 160					194.5
F - 200	325.5	335.5	425.6	315.0	214.5
(*) F - 230					226.5

1)	REMOVABLE COVER FOR ACCESS TO MAIN TERMINALS
2)	SCREW FOR GROUNDING
3)	CENTER OF GRAVITY (C.o.g.) IN CONF. S20F
4)	LIFTING EYE - AVAILABLE ONLY FOR TYPE "F"

OVERALL SIZE, STANDARD TYPE

dimensions in mm.

FORM MD35

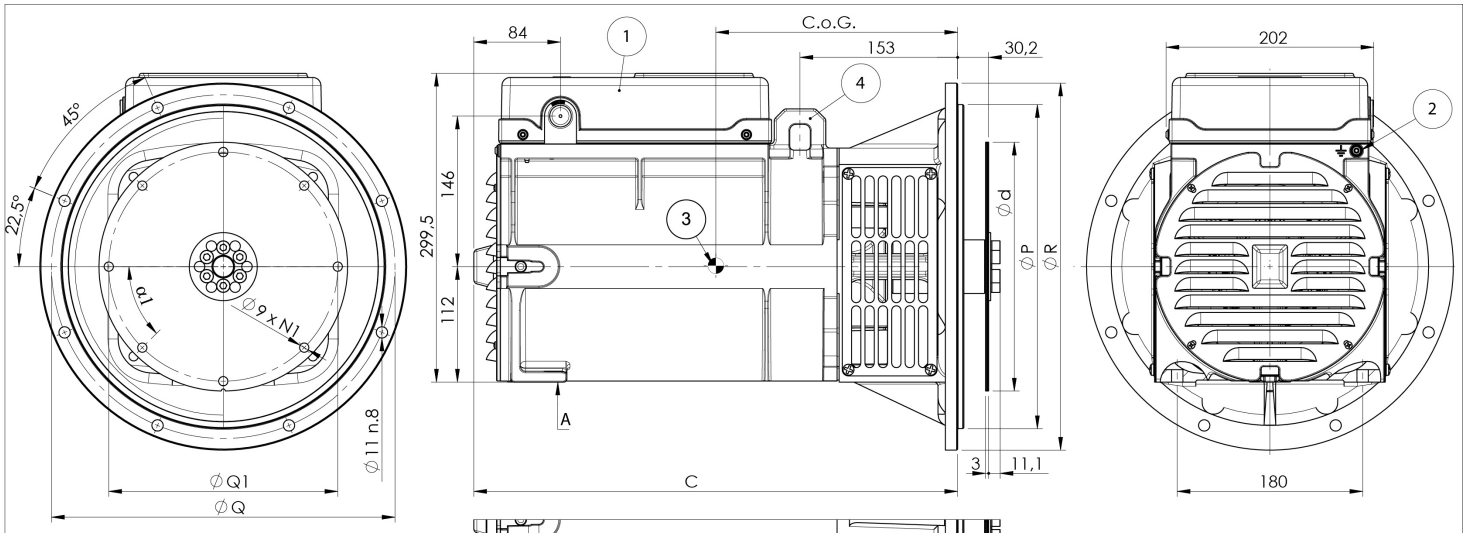

SAE N.	FLANGE		
	P	R	Q
6	266.7	317	285.75
5	314,3	356	333,4

SAE N.	DISC COUPLING				
	d	L	Q1	N1	α1
6 1/2	215,90	30,2	200,00	6	60°
7 1/2	241,30	30,2	222,25	8	45°

(*) AVAILABLE ONLY FOR S20F-P

	TYPE	A	B	C	D	C.o.G.
	FS - 130	285.5	295.5	429.6	275.0	227.2
	FS - 160					219.3
(*)	F - 200	325.5	335.5	469.6	315.0	241.4
(*)	F - 230					254.1

1)	REMOVABLE COVER FOR ACCESS TO MAIN TERMINALS
2)	SCREW FOR GROUNDING
3)	CENTER OF GRAVITY (C.o.g.) IN CONF. S20F MD35/5 F.6.5
4)	LIFTING EYE - AVAILABLE ONLY FOR TYPE "F"

FORM B34

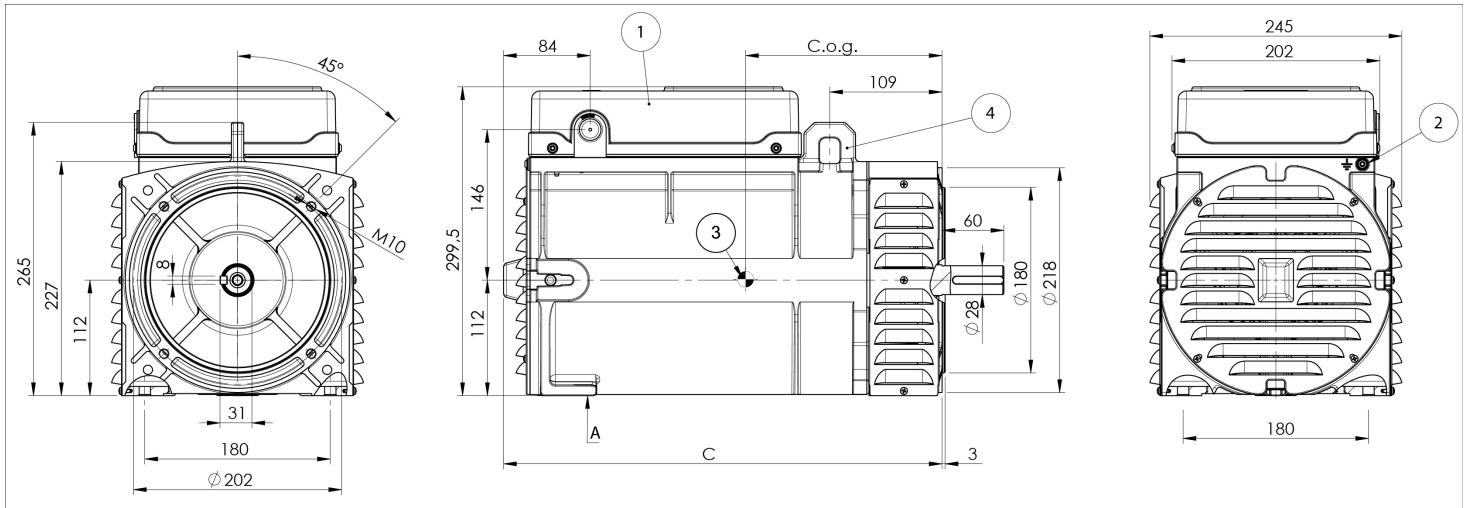

	TYPE	A [mm]	B [mm]	C [mm]	D [mm]	C.o.G. [mm]
	FS - 130	285.5	295.5	385.6	275.0	199.7
	FS - 160					189.3
	F - 200	325.5	335.5	425.6	315.0	210.1
(*)	F - 230					222.3

(*) AVAILABLE ONLY FOR S20F-P

1)	REMOVABLE COVER FOR ACCESS TO MAIN TERMINALS
2)	SCREW FOR GROUNDING
3)	CENTER OF GRAVITY (C.o.g.) IN CONF. S20F
4)	LIFTING EYE - AVAILABLE ONLY FOR TYPE "F"