SENATOR™ G2

FRAME PARTS BREAKDOWN

***GEN 1**

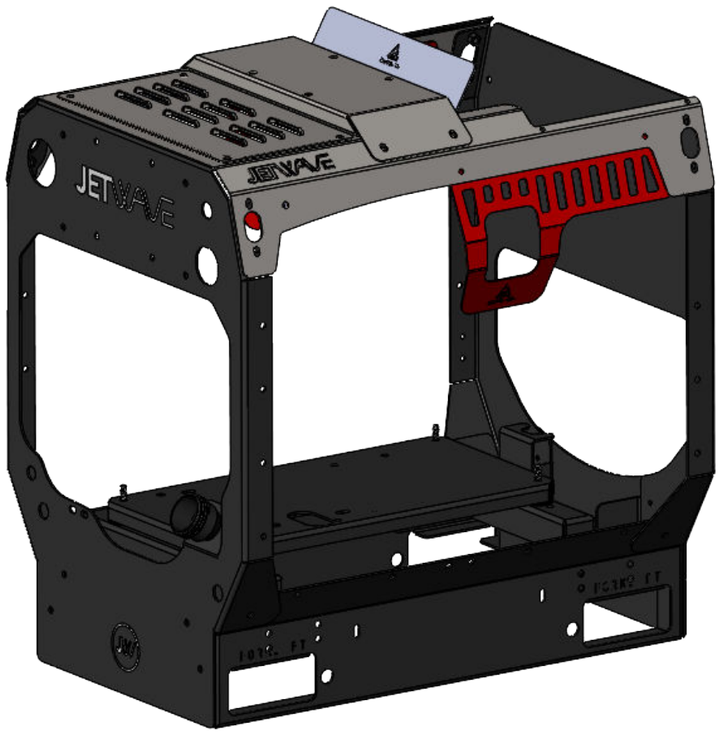

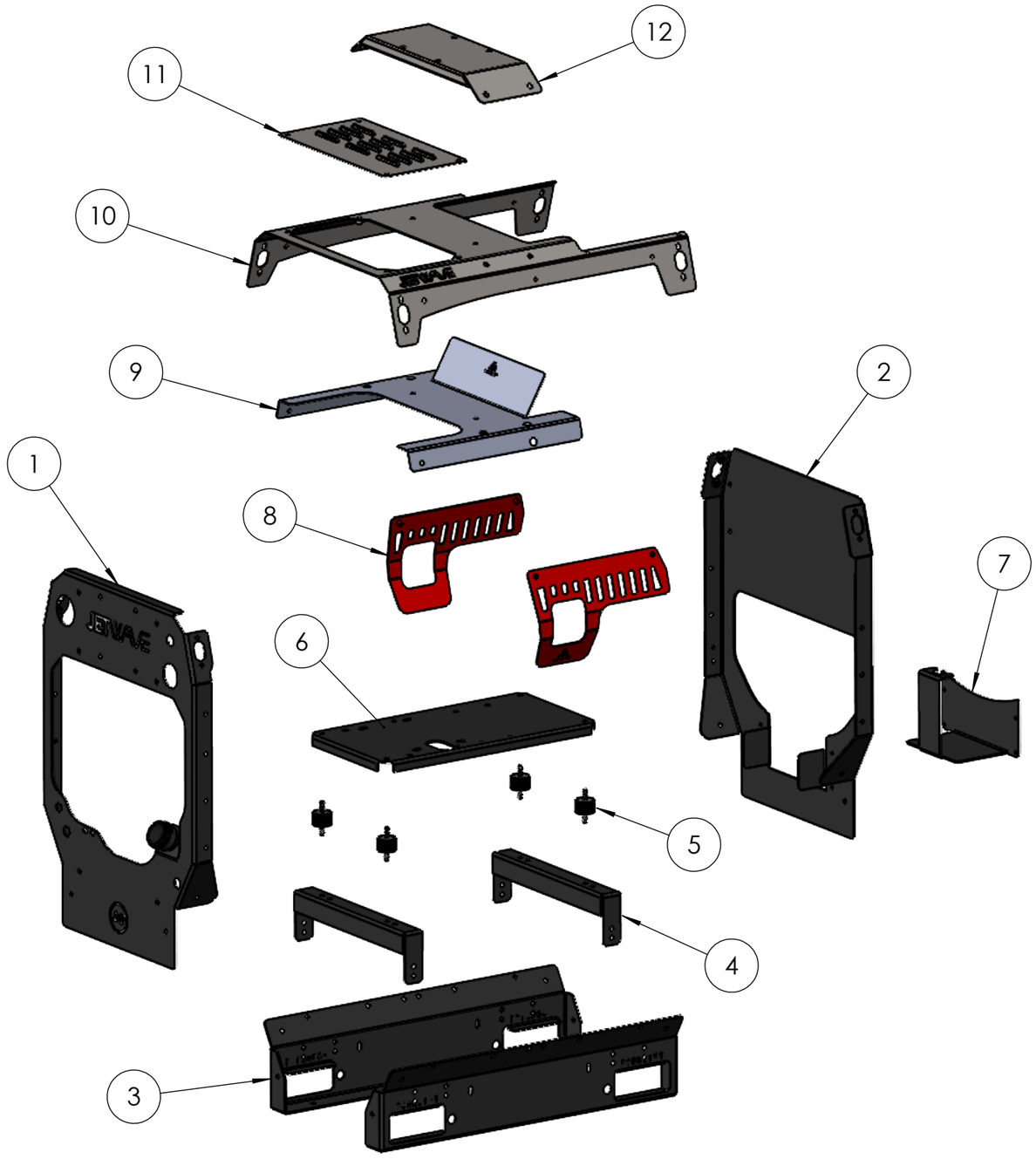

NUMBER	PART NO.	PART DESCRIPTION	QTY
1	**SEN-FMF-R8**	FRONT MAIN FRAME	1
2	**SEN-RMF-R8**	REAR MAIN FRAME	1
3	**SEN-SMF-R8**	SIDE MAIN FRAME	2
4	**SEN-MM-R8**	MOTOR MOUNTS	2
5	**M10403070**	VIBRATION DAMPENERS	4
6	**SEN-MP-R9**	MOTOR PLATE VIB TRAY	1
7	**SEN-BP-R8**	BATTERY PLATE	1
8	**SEN-SG-R8**	SIDE GUARD	2
9	**SEN-HS-R8**	HEAT SHIELD	1
10	**SEN-COV-R8**	TOP COVER	1
11	**SEN-TAP-R7**	TOP ACCESS PLATE	1
12	**SEN-HRP-R7**	TOP HOSE REEL PLATE	1

SENATOR™ G2

FRAME PARTS BREAKDOWN

***GEN 2**

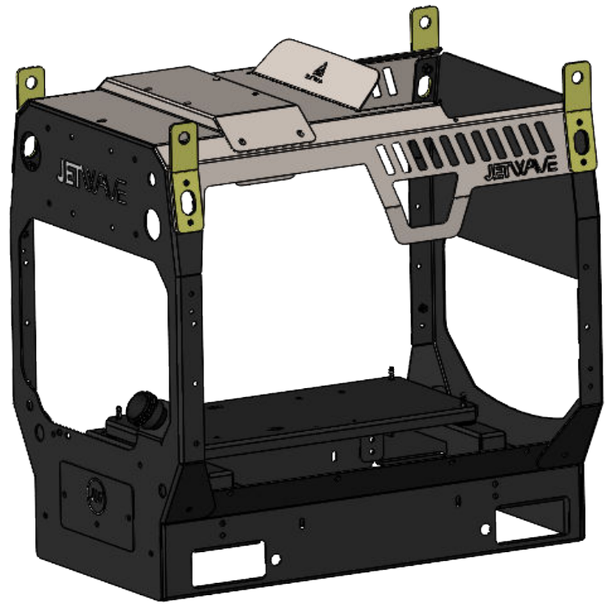

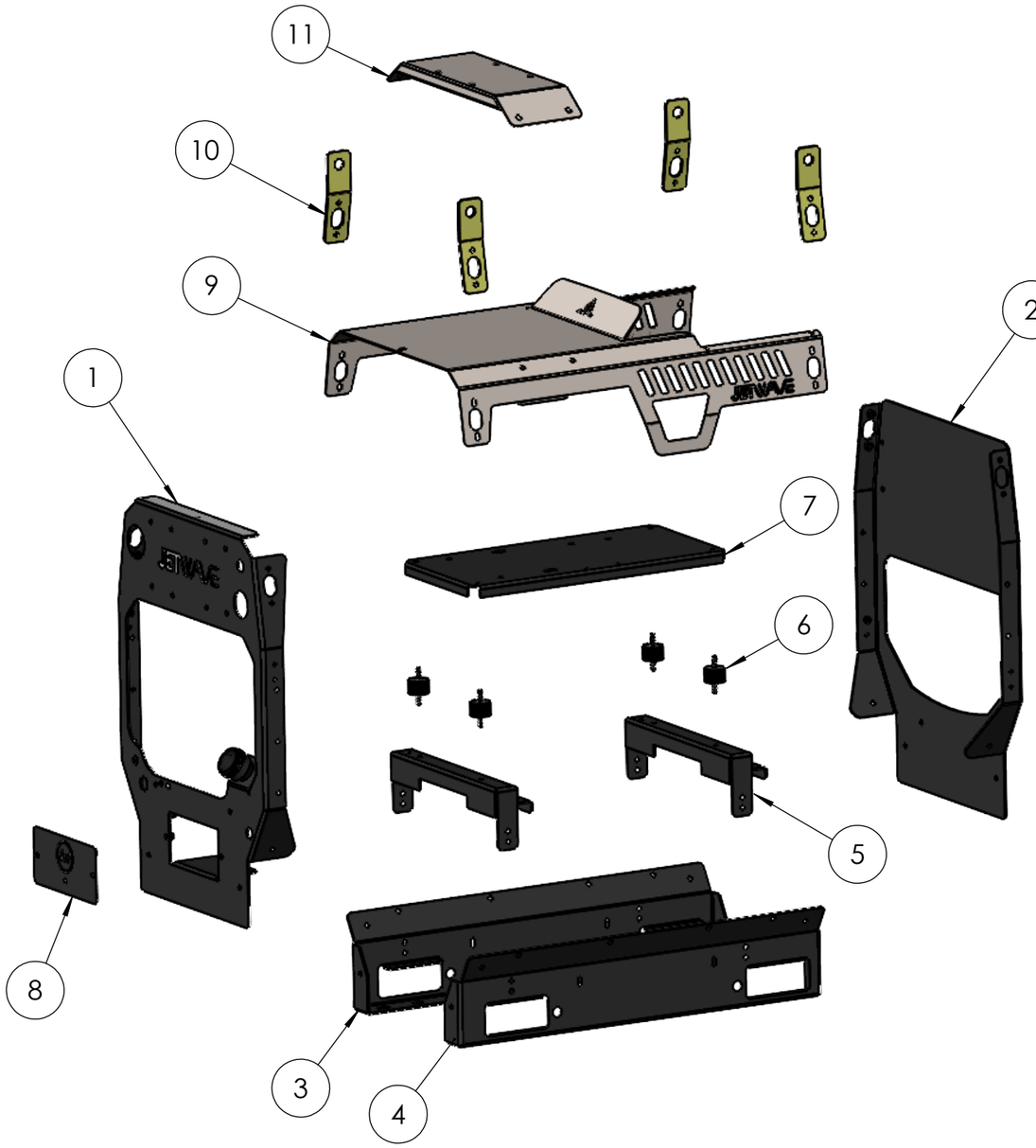

NUMBER	PART NO.	PART DESCRIPTION	QTY
1	**SEN-FMF-R9**	FRONT MAIN FRAME	1
2	**SEN-RMF-R9**	REAR MAIN FRAME	1
3	**SEN-SMFL-R9**	SIDE MAIN FRAME LEFT	1
4	**SEN-SMFR-R9**	SIDE MAIN FRAME RIGHT	1
5	**SEN-MM-R9**	MOTOR MOUNTS	2
6	**M10403070**	VIBRATION DAMPENERS	4
7	**SEN-MP-R9**	MOTOR PLATE VIB TRAY	1
8	**SEN-BP-R9**	BATTERY PLATE	1
9	**SEN-COV-R9**	TOP COVER	1
10	**SEN-LIFTHOOK-R9**	LIFTING HOOKS	4
11	**SEN-HRP-R7**	TOP HOSE REEL PLATE	1

JETWAVE | HIGH PRESSURE CLEANERS

SENATOR™ G2

MOTOR PARTS BREAKDOWN

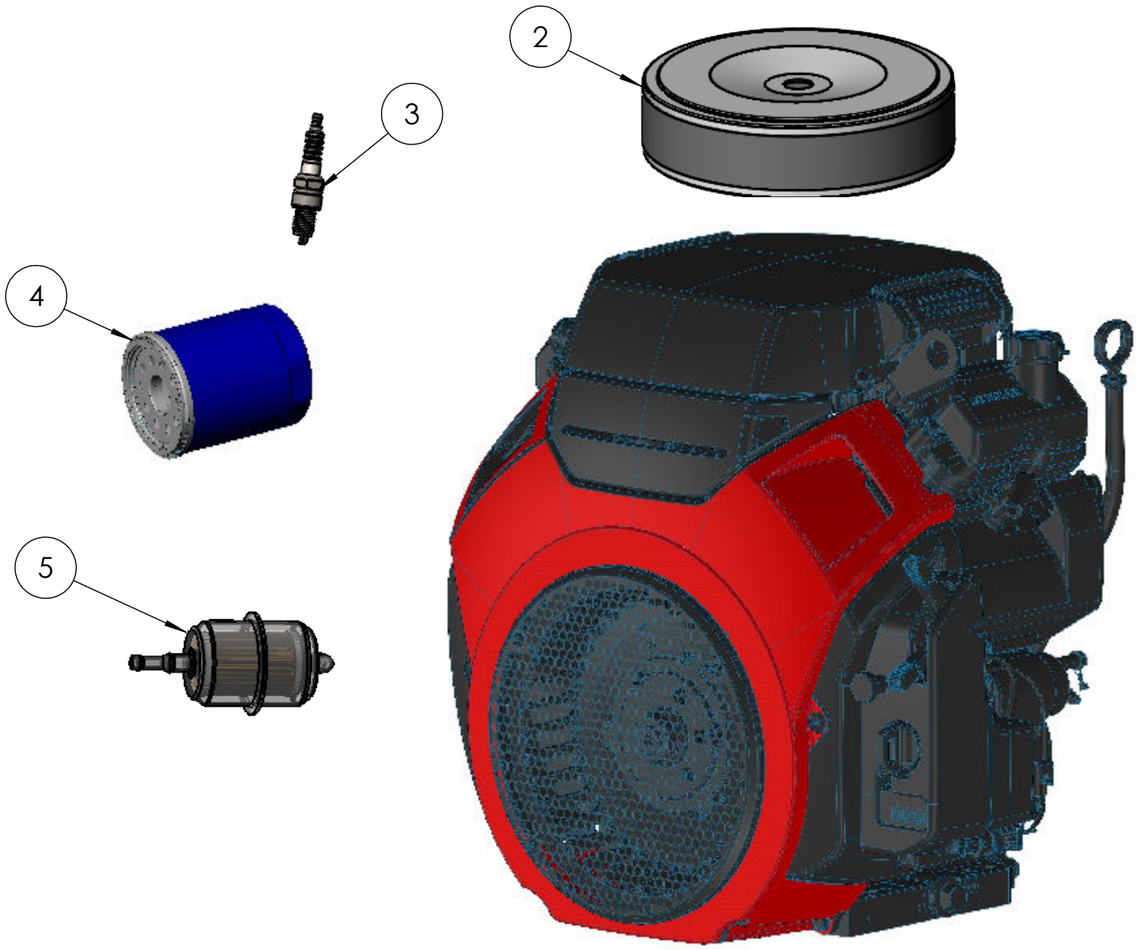

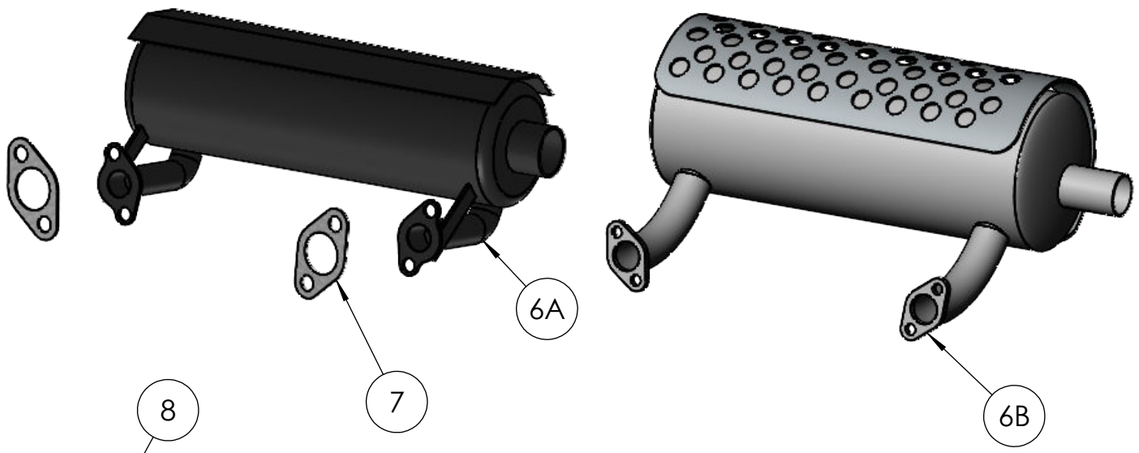

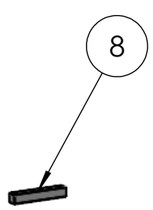

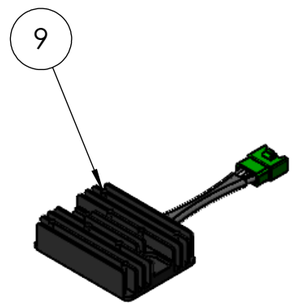

NUMBER	PART NO.	PART DESCRIPTION	QTY
1	**HONDA GX690**	MOTOR	1
2	**17210-Z6L-010**	AIR FILTER SUIT GX690	1
3	**ZGR5A**	HONDA SPARK PLUG	2
4	**15400-RAF-T01**	OIL FILTER CARTRIDGE	1
5	**16910-Z6L-003**	FUEL FILTER	1
6A	**VHLA1***	EXHAUST - LH*	1
6B	**VHLC1***	MUFFLER - LH *	1
7	**690-G**	EXHAUST GASKET	2
8	**650990**	SHAFT KEY	1
9	**31750-Z2E-803**	ENGINE RECTIFIER - FOR GX690	1

NOTES*

*VHLA1/VHLC1 (LEFT EXHAUST) - OUTLET STARTER MOTOR SIDE.

*VHRA1/VHRC1 (RIGHT EXHAUST) - OUTLET OIL FILTER SIDE.

SENATOR™ G2

MOTOR PARTS BREAKDOWN

1 COMPLETE MOTOR - GX700

COMPLETE MOTOR - GX800

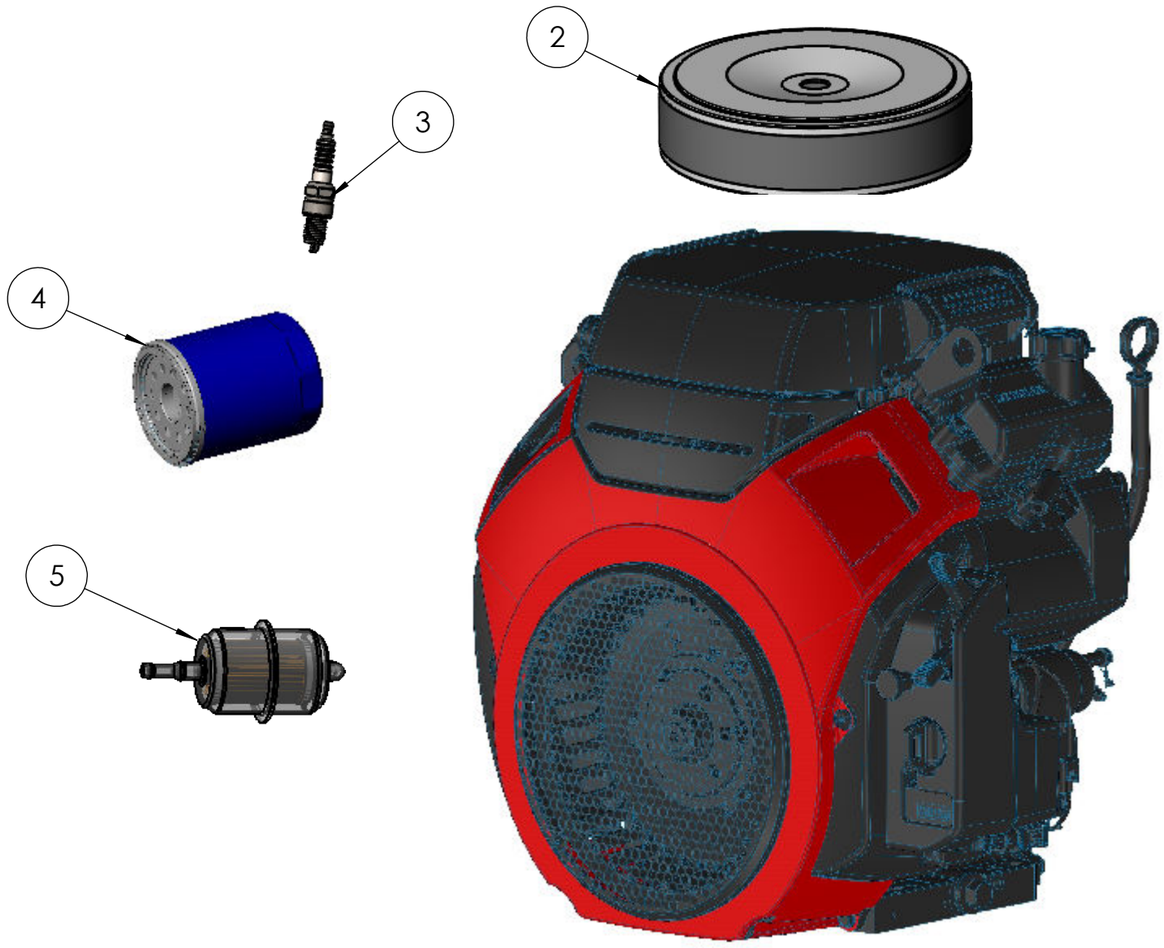

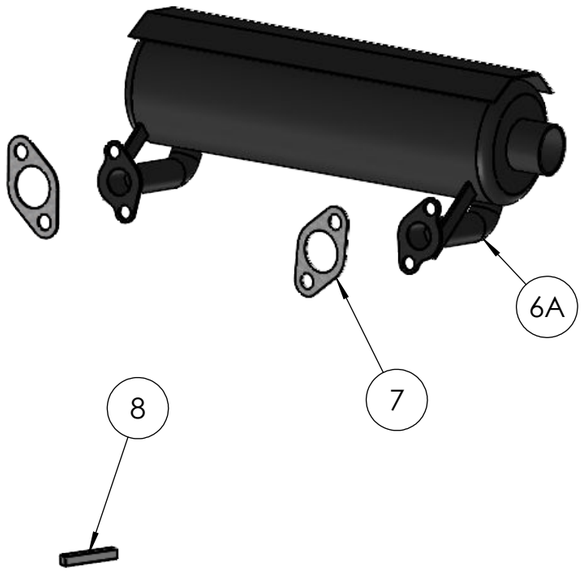

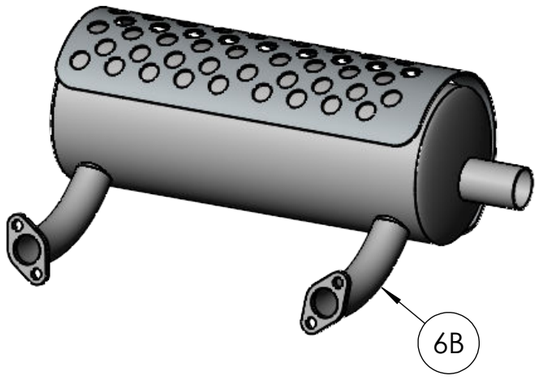

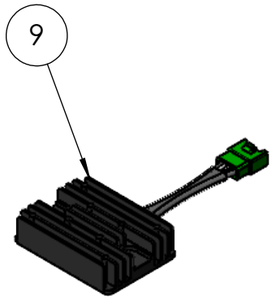

NUMBER	PART NO.	PART DESCRIPTION	QTY
1	**HONDA GX690**	MOTOR	1
2	**17210-Z6L-010**	AIR FILTER SUIT GX690	1
3	**BPR5ES**	HONDA SPARK PLUG	2
4	**15400-RAF-T01**	OIL FILTER CARTRIDGE	1
5	**16910-ZDW-003**	FUEL FILTER	1
6A	**VHLA1***	EXHAUST - LH*	1
6B	**VHLC1***	MUFFLER - LH *	1
7	**690-G**	EXHAUST GASKET	2
8	**650990**	SHAFT KEY	1
9	**31750-ZDX-003**	RECTIFIER ASSY., REGULATOR (17A) SUIT GX700, GX800	1

NOTES*

*VHLA1/VHLC1 (LEFT EXHAUST) - OUTLET STARTER MOTOR SIDE.

*VHRA1/VHRC1 (RIGHT EXHAUST) - OUTLET OIL FILTER SIDE.

SENATOR™ G2

MOTOR PARTS BREAKDOWN

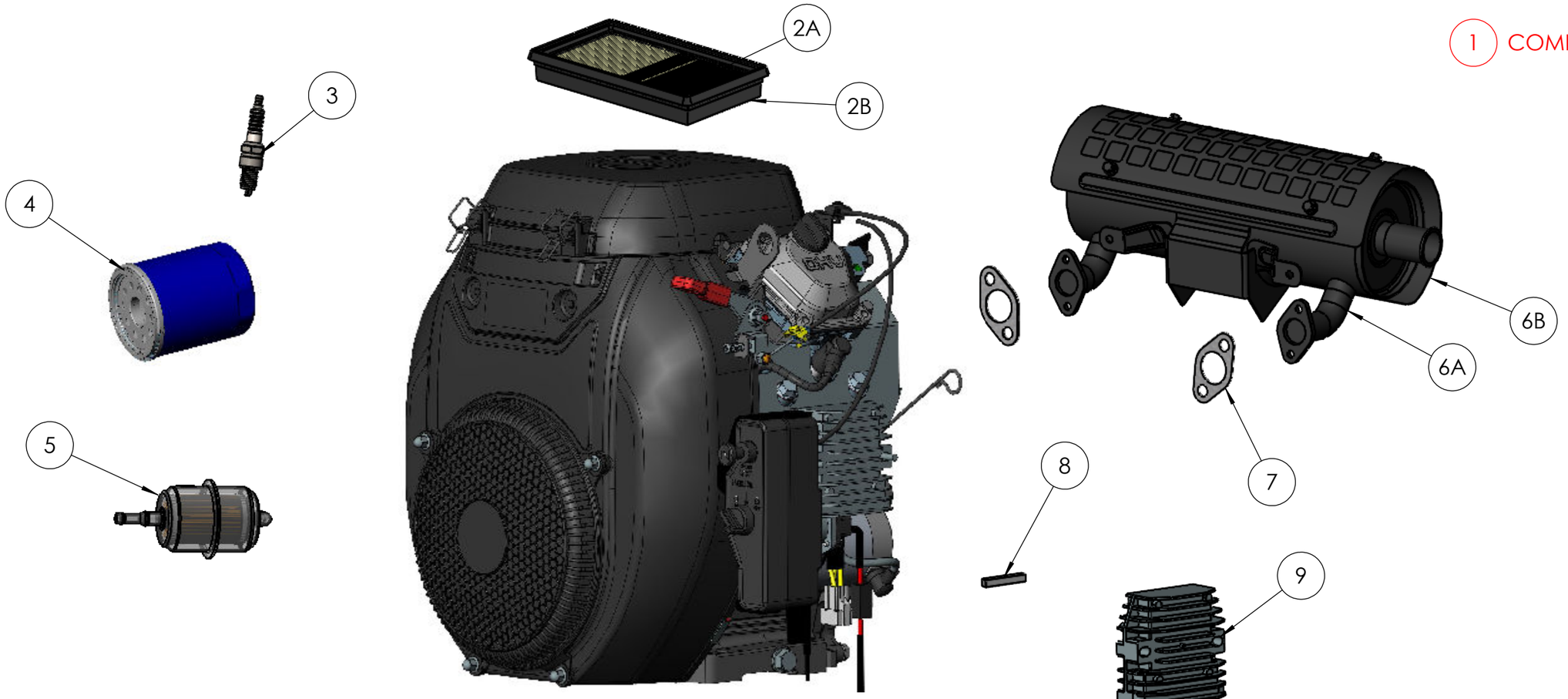

1 COMPLETE MOTOR - JX750

NUMBER	PART NO.	PART DESCRIPTION	QTY
1	**JX750**	JX750 V-TWIN MULTI-PURPOSE ENGINE	1
2A	**17210-Z6L-010100051216**	JX750 AIR FILTER - PAPER	1
2B	**100051214**	JX750 AIR FILTER GASKET	1
3	**ZGR5A100009378**	JX750 SPARK PLUG	2
4	**100004087-0001**	JX750 OIL FILTER	1
5	**100148809**	JX750 FUEL FILTER	1
6A	**100770917**	JX750 MUFFLER	1
6B	**100127048**	JX750 MUFFLER OPPOSITE	1
7	**100149071**	JX750 MUFFLER GASKET	2
8	**650990**	SHAFT KEY	1
9		ENGINE RECTIFIER - FOR JX750	1

NOTES*

*100770917 (LEFT EXHAUST) - OUTLET STARTER MOTOR SIDE.

*100127048 (RIGHT EXHAUST) - OUTLET OIL FILTER SIDE.

SENATOR™ G2

FITTINGS PART BREAKDOWN

FITTINGS SETUP FOR PUMPS - JP30.21U5 - JP35.23U5

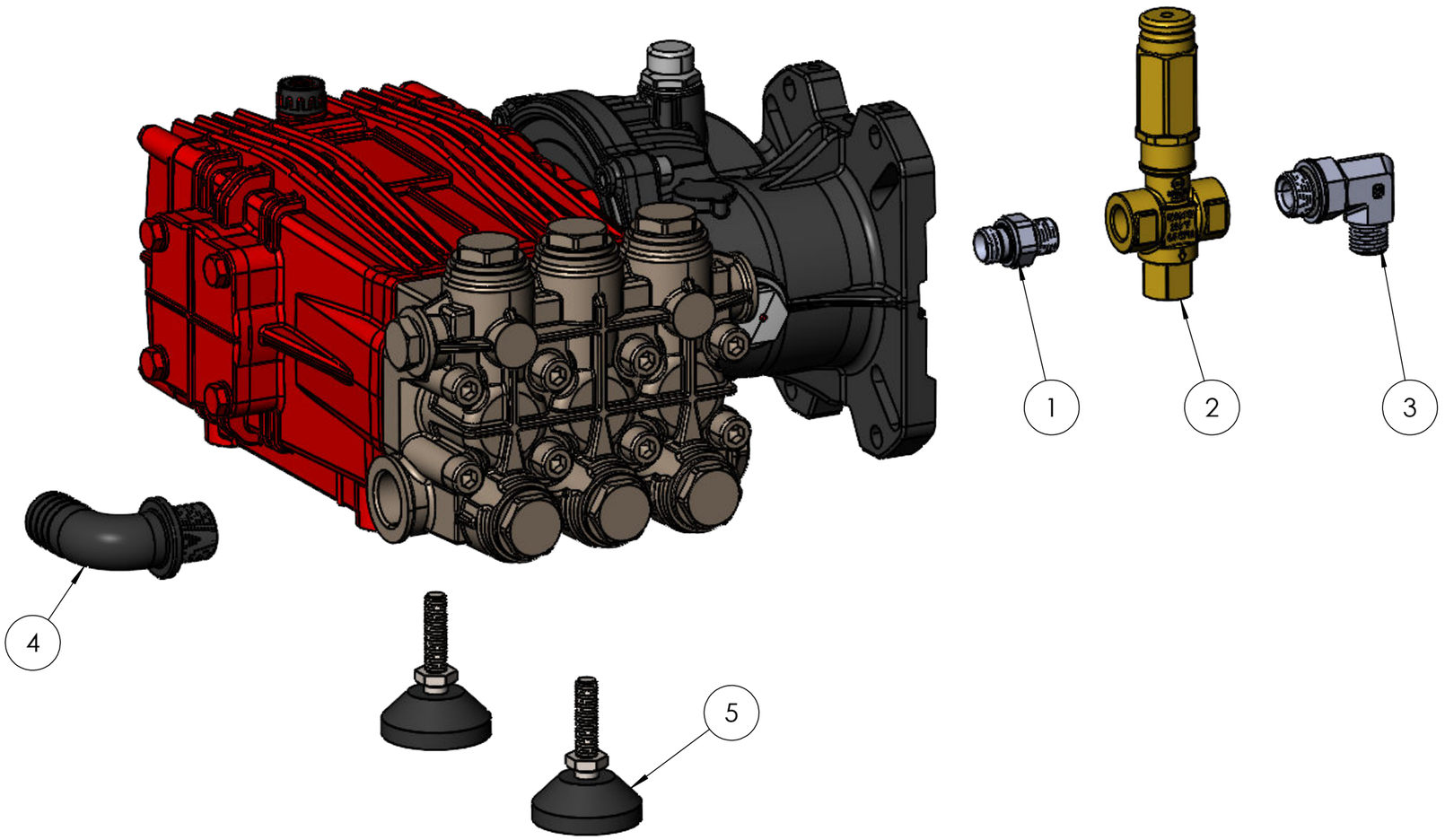

NUMBER	PART NO.	PART DESCRIPTION	QTY
1	**S75-0606**	3/8 BSPP X 3/8 BSPT NIPPLE	1
2	**60058000**	VS350 SECURITY VALVE	1
3	**S77-0606**	3/8 M/F 90' ELBOW	1
4	**8011203**	PLASTIC 90 HOSE TAIL 3/4 X 1"	1
5	**GH400201-A**	PUMP FOOT	2

SENATOR™ G2

FITTINGS PART BREAKDOWN

FITTINGS SETUP FOR PUMPS - JP30.26U5
- JP30.31U5

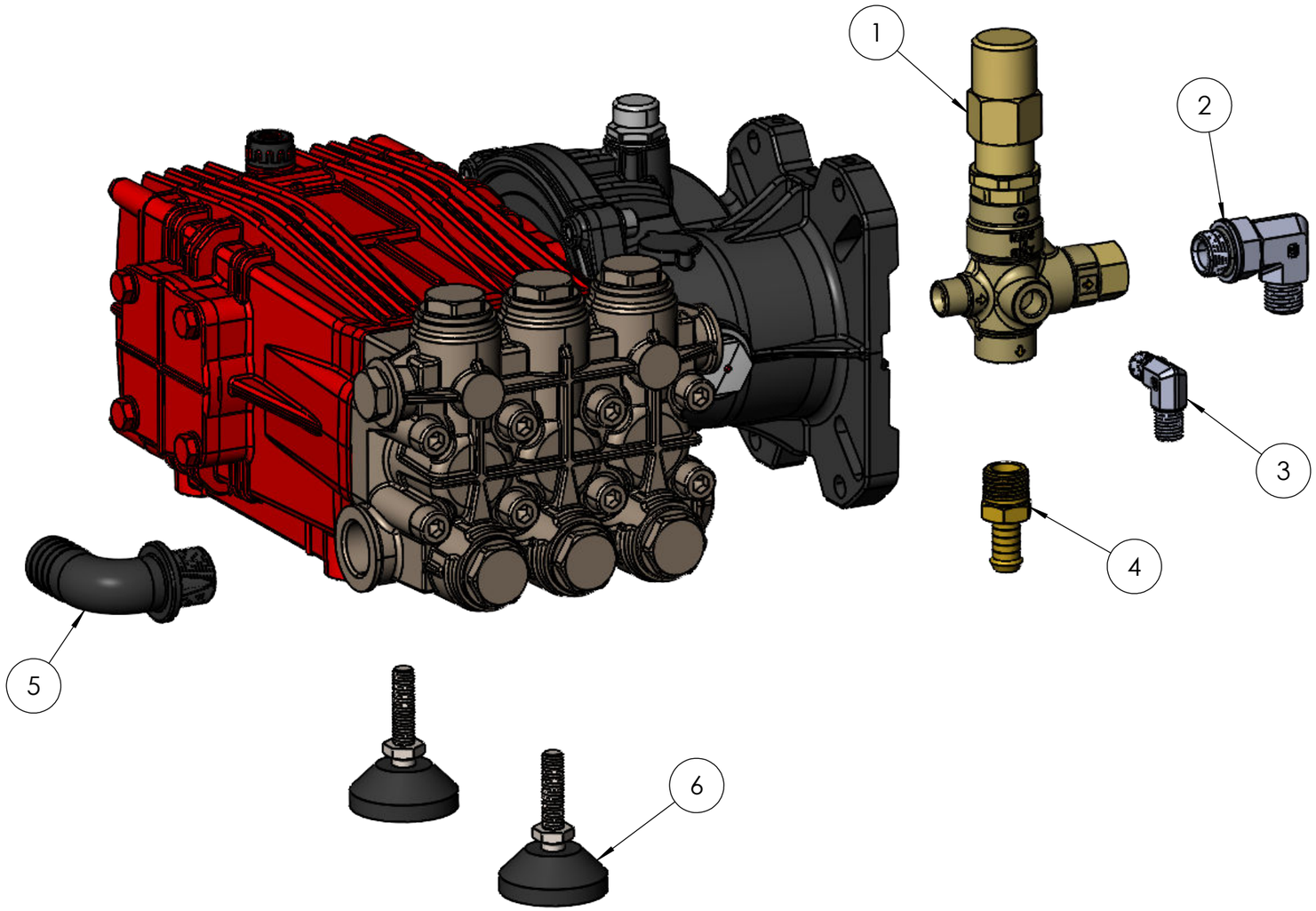

NUMBER	PART NO.	PART DESCRIPTION	QTY
1	**60152000**	VS360 SAFETY VALVE	1
2	**S77-0606**	3/8 M/F 90' ELBOW	1
3	**S49-0404**	1/4 X 1/4 MALE ELBOW TAPERED	1
4	**06003-0808**	BR 1/2 TAIL 1/2 THREAD MALE	1
5	**8011203**	PLASTIC 90 HOSE TAIL 3/4 X 1"	1
6	**GH400201-A**	PUMP FOOT	2

SENATOR™ G2

JP30.21U5 - PUMP PARTS BREAKDOWN

PISTON KIT

KIT 01006	
ITEM NO.	QTY
A1	3
A2	3
A3	3
A4	3
A5	3

WATER SEAL KIT

KIT 01010	
ITEM NO.	QTY
B1	3
B2	3
B3	3

VALVE KIT

KIT 01003	
ITEM NO.	QTY
C1	6
C2	6

BRASS RING KIT

KIT 01017	
ITEM NO.	QTY
D1	3
D2	3
D3	3

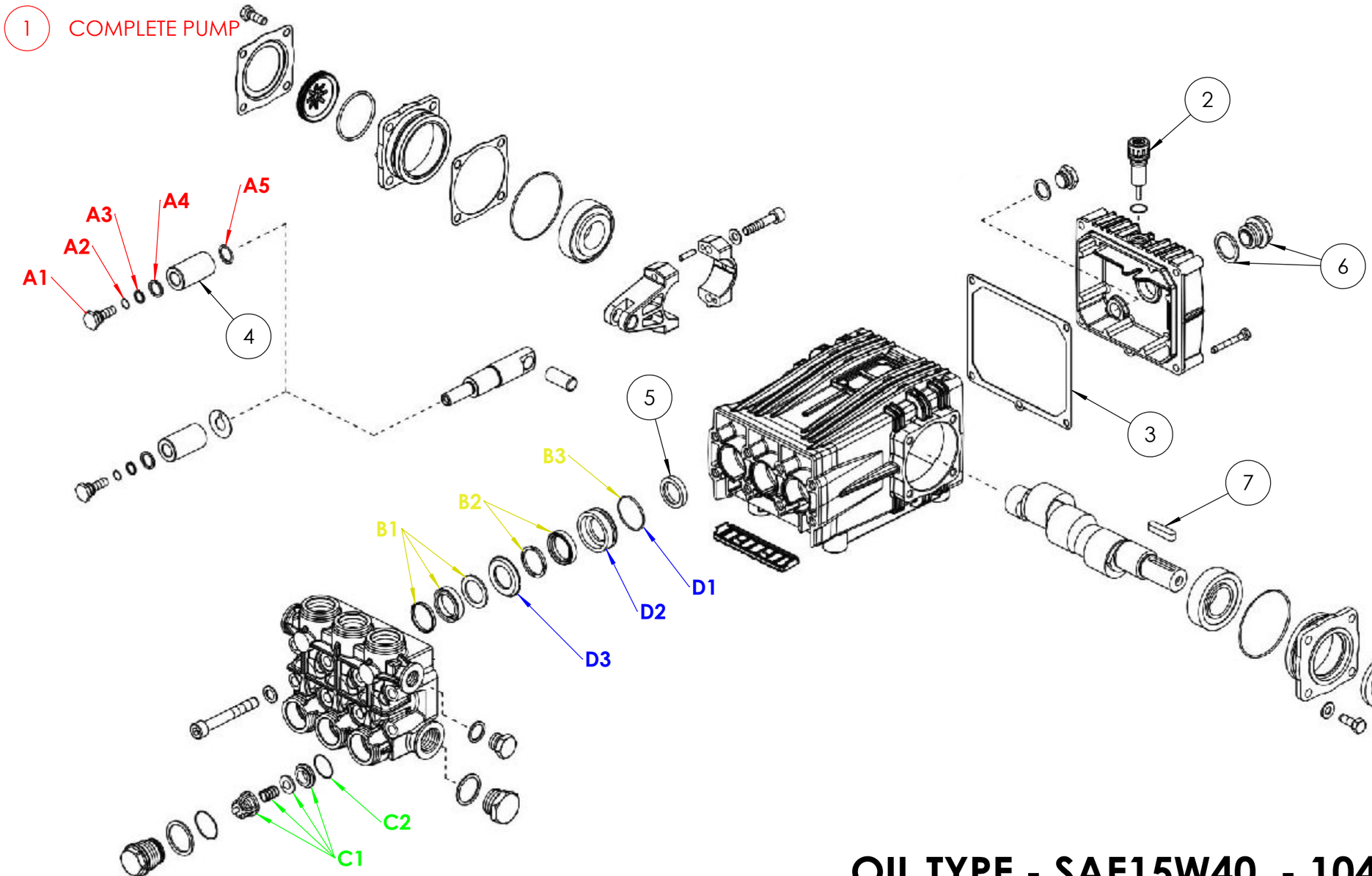

OIL TYPE - SAE15W40 - 1040ml

NUMBER	PART NO.	PART DESCRIPTION	QTY
1	**JP30.21U5**	COMPLETE PUMP	1
2	**162504**	OIL DIPSTICK	1
3	**1101N6**	GASKET	1
4	**120532**	PISTON D22	3

NUMBER	PART No.	PART DESCRIPTION	QTY
5	**000781**	UDOR OIL SEAL	3
6	**1603B8**	SIGHT GLASS	1
7	**080117**	KEY WAY SUIT JP PUMPS	1
8	**000738**	REAR OIL SEAL	1

SENATOR™ G2

JP30.26U5 - PUMP PARTS BREAKDOWN
JP30.31U5

PISTON KIT

JP30.26U5		JP30.31U5	
KIT 01006		**KIT 01038**	
ITEM NO.	QTY	ITEM NO.	QTY
A1	3	A1	3
A2	3	A2	3
A3	3	A3	3
A4	3	A4	3
A5	3	A5	3

WATER SEAL KIT

KIT 01010	
ITEM NO.	QTY
B1	3
B2	3
B3	3

VALVE KIT

KIT 01003	
ITEM NO.	QTY
C1	6
C2	6

BRASS RING KIT

KIT 01017	
ITEM NO.	QTY
D1	3
D2	3
D3	3

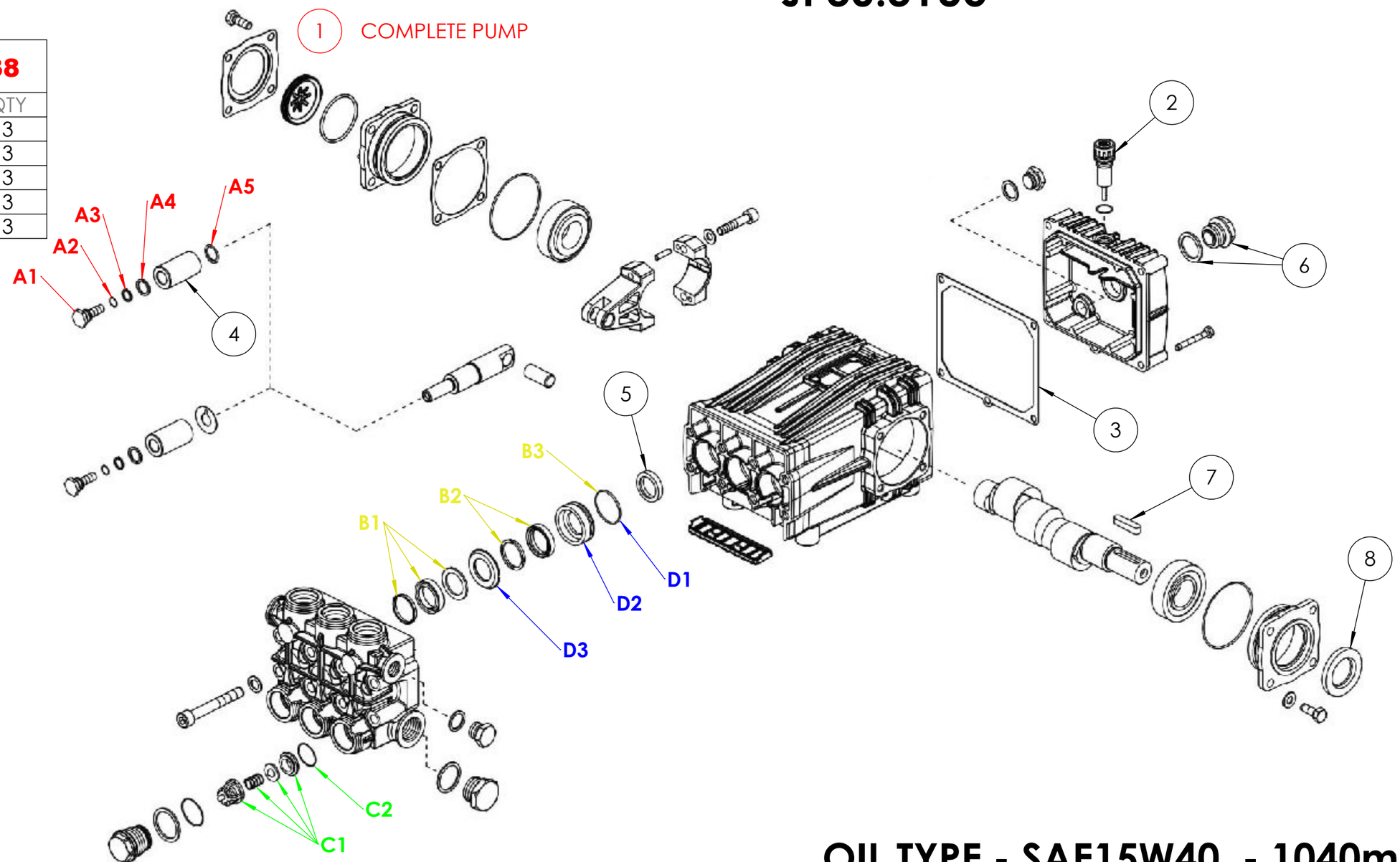

OIL TYPE - SAE15W40 - 1040ml

NUMBER	PART NO.	PART DESCRIPTION	QTY
1	**JP30.26U5 JP30.31U5**	COMPLETE PUMP	1
2	**162504**	OIL DIPSTICK	1
3	**1101N6**	GASKET	1
4	**120532**	PISTON D22	3

NUMBER	PART No.	PART DESCRIPTION	QTY
5	**000781**	UDOR OIL SEAL	3
6	**1603B8**	SIGHT GLASS	1
7	**080117**	KEY WAY SUIT JP PUMPS	1
8	**000738**	REAR OIL SEAL	1

SENATOR™ G2

JP35.23U5 - PUMP PARTS BREAKDOWN
JP35.16U5

PISTON KIT

KIT 01040	
ITEM NO.	QTY
A1	3
A2	3
A3	3
A4	3
A5	3

WATER SEAL KIT

KIT 01129	
ITEM NO.	QTY
B1	3
B2	3
B3	3

VALVE KIT

KIT 01063	
ITEM NO.	QTY
C1	6
C2	6
C3	6

BRASS RING KIT

KIT 01042	
ITEM NO.	QTY
D1	3
D2	3
D3	3

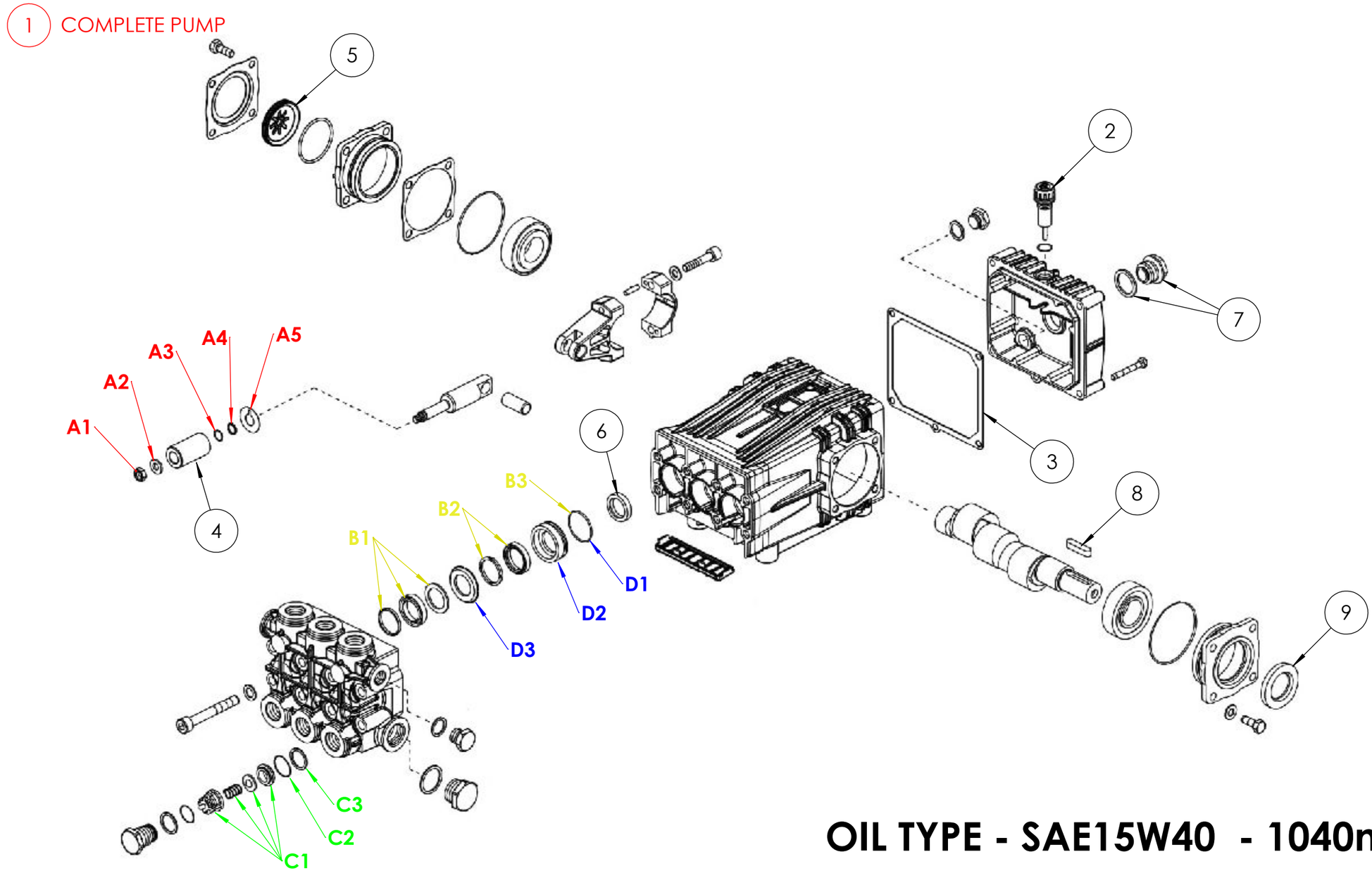

OIL TYPE - SAE15W40 - 1040ml

NUMBER	PART NO.	PART DESCRIPTION	QTY
1	**JP35.23U5**	COMPLETE PUMP	1
2	**162504**	OIL DIPSTICK	1
3	**1101N6**	GASKET	1
4	**120531**	PISTON D20	3

NUMBER	PART No.	PART DESCRIPTION	QTY
5	**0208D5**	SIGHT GLASS "B/BK/C/CK" JWE	1
6	**000781**	UDOR OIL SEAL	3
7	**1603B8**	SIGHT GLASS	1
8	**080117**	KEY WAY SUIT JP PUMPS	1
9	**000738**	REAR OIL SEAL	1

JETWAVE | HIGH PRESSURE CLEANERS

SENATOR™ G2

GEARBOX PARTS BREAKDOWN

1 COMPLETE GEARBOX ASSY

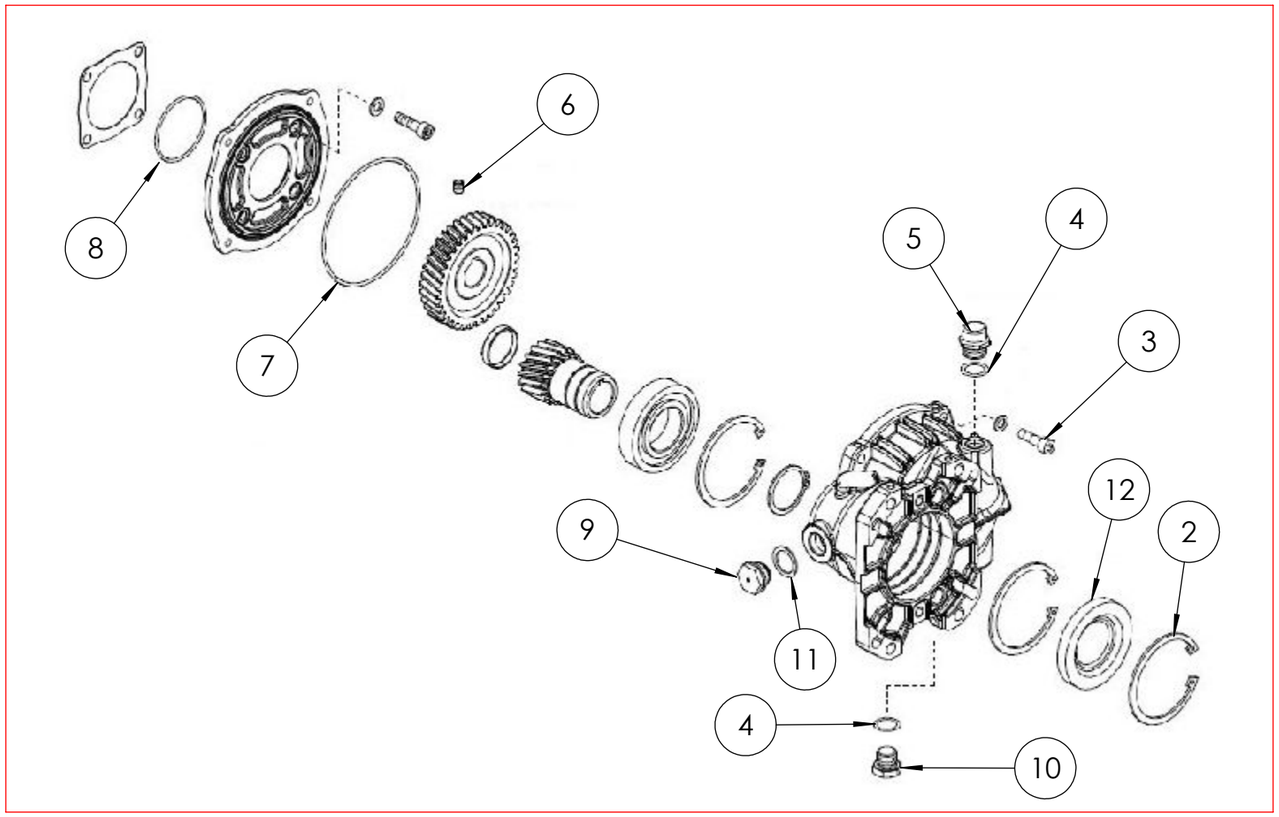

NUMBER	PART NO.	PART DESCRIPTION	QTY
1	**JGB11/8.31URCX**	JW GEARBOX - 31HP 1-1/8"	1
2	**000787**	OIL SEAL	1
3	**180511**	GEARBOX BOLTS	4
4	**RL21D-08**	DOWTY SEAL - 1/2"	2
5	**1603K6**	OIL PLUG	1
6	**061407**	GRUBSCREW	1
7	**110175**	GEARBOX LARGE O-RING	1
8	**1101D1**	GEARBOX SMALL O-RING	1
9	**160306**	SIGHT GLASS	1
10	**160362**	GEARBOX PLUG	1
11	**141204**	UDOR GEARBOX ALLOY SIGHT GLASS WASHER	1
12	**000786**	OIL SEAL - SUIT 1-1/8" GEARBOX	1

OIL TYPE - SAE80W90 -300ml

SENATOR™ G2

UNLOADER PARTS BREAKDOWN

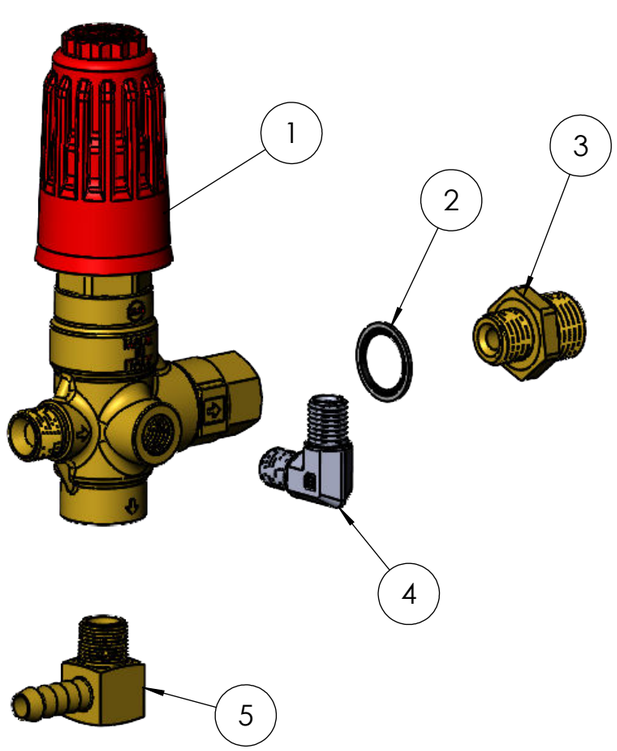

NUMBER	PART NO.	PART DESCRIPTION	QTY
1	**60170000**	VALVE VB350/3 G 3/8	1
2	**RL21D-06**	DOWTY SEAL - 3/8"	1
3	**26003031**	NIPPLE A M22x1.5 3/8" BSP M	1
4	**S49-0404**	1/4 X 1/4 MALE ELBOW TAPERED	1
5	**06006-0808**	BR 1/2 TAIL 1/2 THREAD MALE ELBOW	1

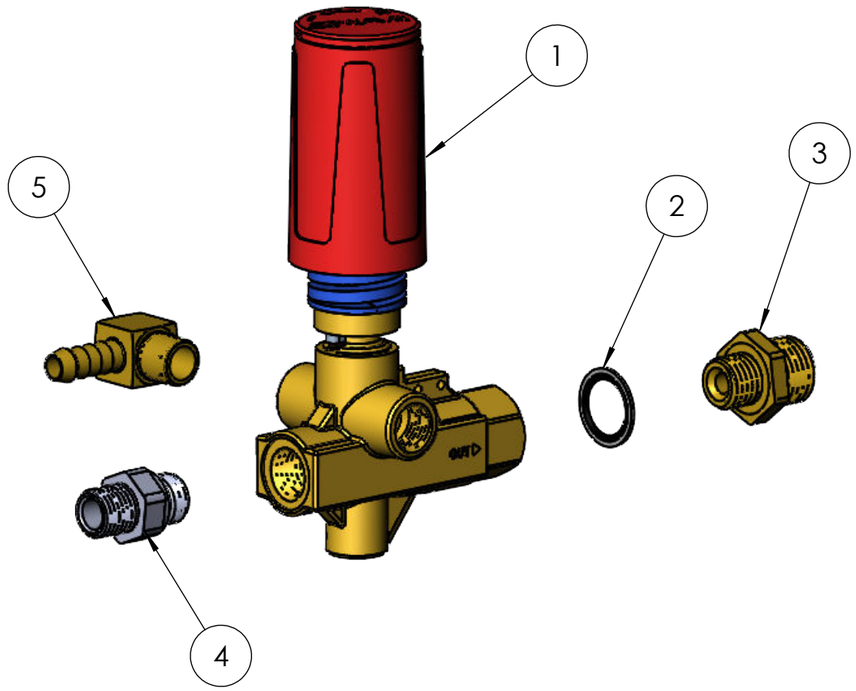

NUMBER	PART NO.	PART DESCRIPTION	QTY
1	**JWUV35050**	JW PREMIUM UNLOADER VALVE 350 BAR / 50 LPM	1
2	**RL21D-06**	DOWTY SEAL - 3/8"	1
3	**26003031**	NIPPLE A M22x1.5 3/8" BSP M	
4	**S46-0606**	STRAIGHT 3/8 NON TAPERED	1
5	**06006-0806**	BR 1/2 TAIL 3/8 THREAD MALE ELBOW	1

SENATOR™ G2

FRONT COMPONENTS PARTS BREAKDOWN

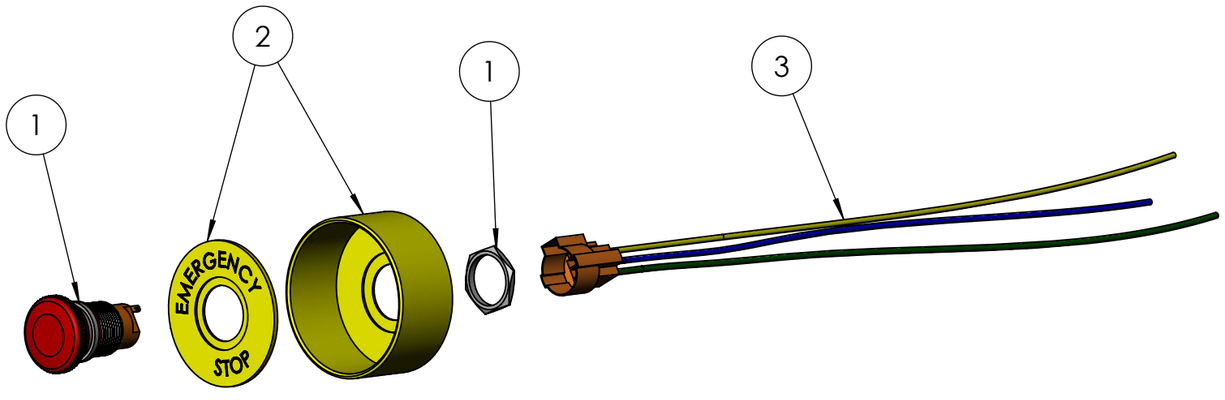

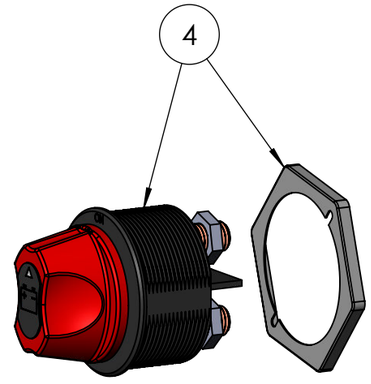

NUMBER	PART NO.	PART DESCRIPTION	QTY
1	**LB22M-JW**	S/STEEL 22mm JETWAVE EMERGENCY STOP BUTTON	1
2	**EM-60**	PROTECTIVE SHROUD - 22mm EMERGENCY STOP	1
3	**WPLB22M**	WIRE PLUG TO SUIT S/STEEL JW LB E/STOP	1
4	**75920-05BX**	BATTERY ISOLATOR SWITCH WITH KEY	1
5	**13003540**	PRESS GAUGE BACK ENTRY 1/4BSP 0-600	1
6	**JWBRAK-2**	GALV GAUGE BRACKET	1
7	**S25-0404**	M6 X 50 BOLT - M6 FLANGE NUT	2

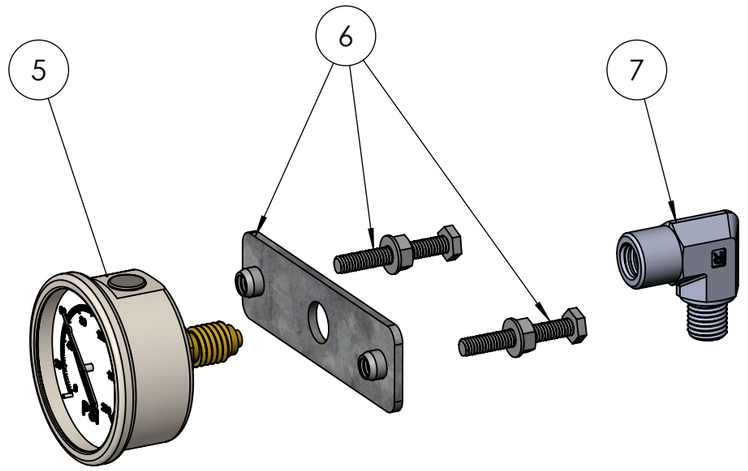

SENATOR™ G2

FRONT PARTS BREAKDOWN

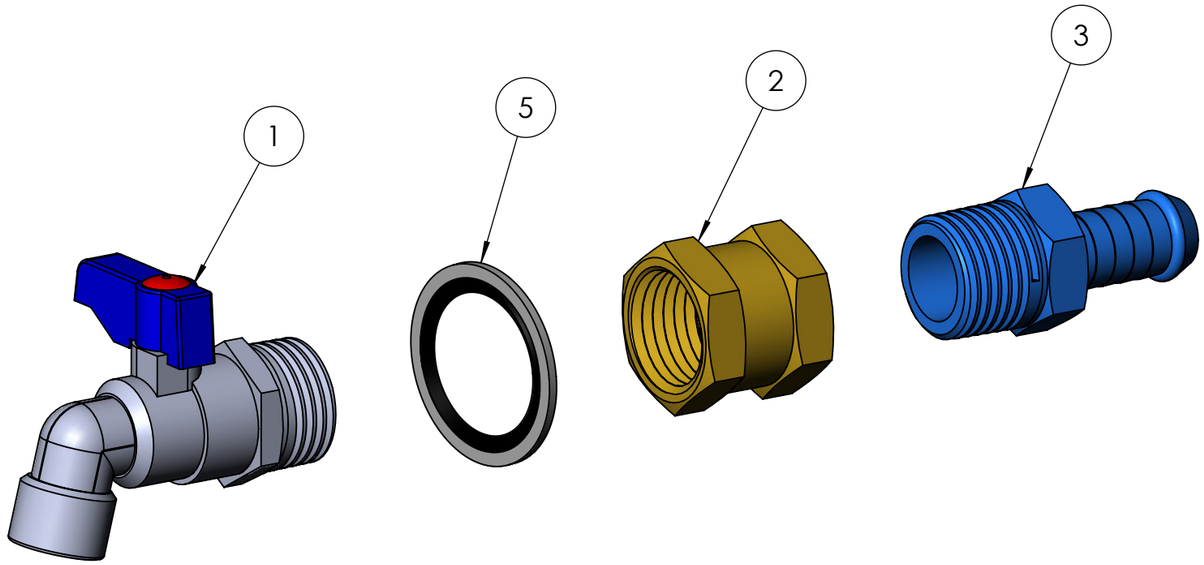

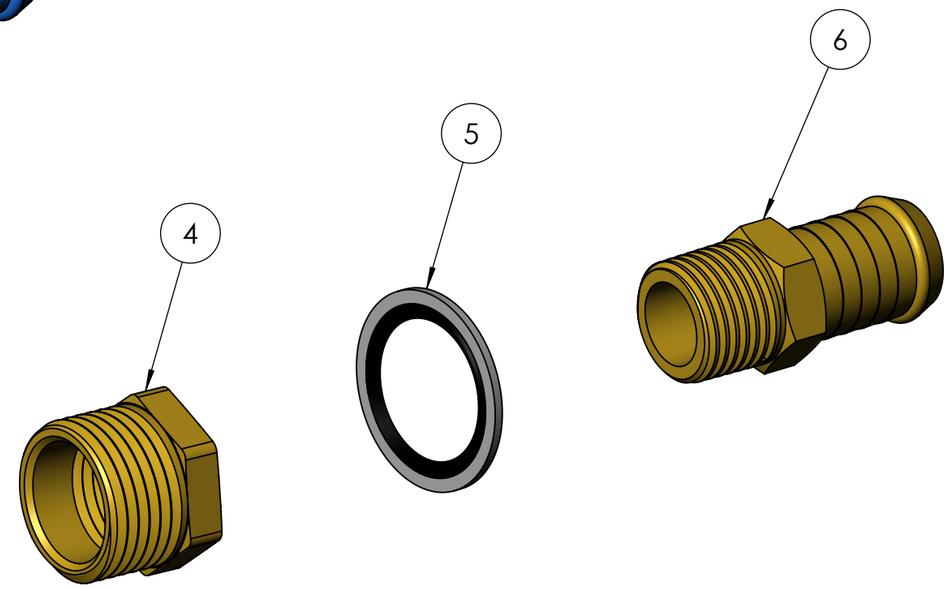

NUMBER	PART NO.	PART DESCRIPTION	QTY
1	**TAP-15**	TAP 15mm	1
2	**209365**	SOCKET HEX BRASS 15MM	1
3	**1568-5208**	1/2 X 1/2 M STRAIGHT TAILPIECE	1
4	**AW336**	BUSH REDUCING BRASS 20MM X 15MM (3/4 X 1/2)	1
5	**RL21-08**	BONDED SEAL - 1/2"	2
6	**06003-1208**	BR 3/4 TAIL 1/2 THREAD MALE	1

SENATOR™ G2

FUEL TANK PARTS BREAKDOWN

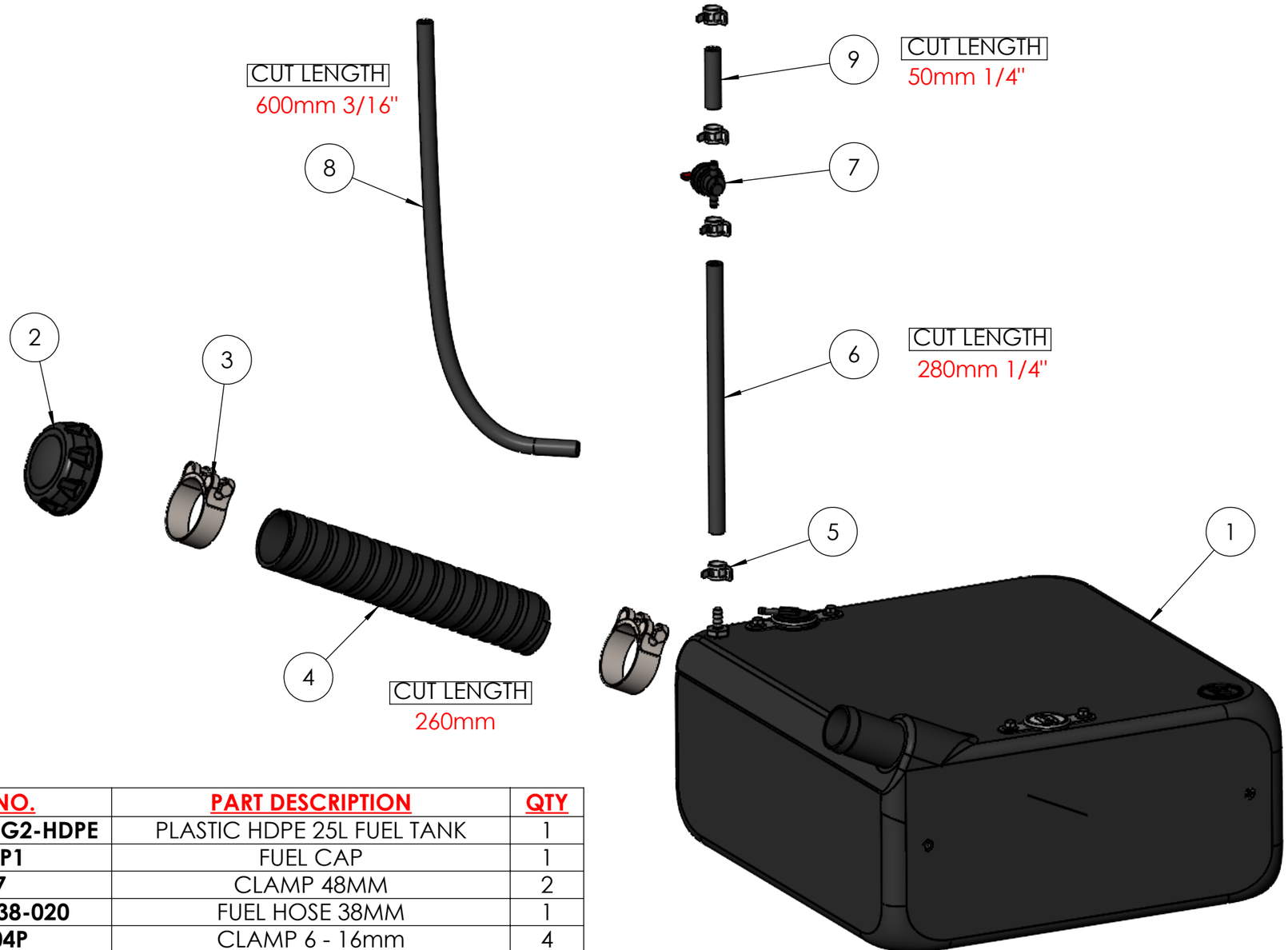

NUMBER	PART NO.	PART DESCRIPTION	QTY
1	**90008-25FT-G2-HDPE**	PLASTIC HDPE 25L FUEL TANK	1
2	**F-CAP1**	FUEL CAP	1
3	**C07**	CLAMP 48MM	2
4	**10-400-038-020**	FUEL HOSE 38MM	1
5	**MH004P**	CLAMP 6 - 16mm	4
6	**FHS-06V-SEN1**	FUEL LINE HOSE 6mm	1
7	**PTC8025**	FUEL TAP 1/4"	1
8	**FHS-05V-SEN1**	FUEL LINE HOSE 5mm	1
9	**FHS-06V-SEN2**	FUEL LINE HOSE 6mm	1

JETWAVE | HIGH PRESSURE CLEANERS

SENATOR™ G2

WATERTANK PARTS BREAKDOWN

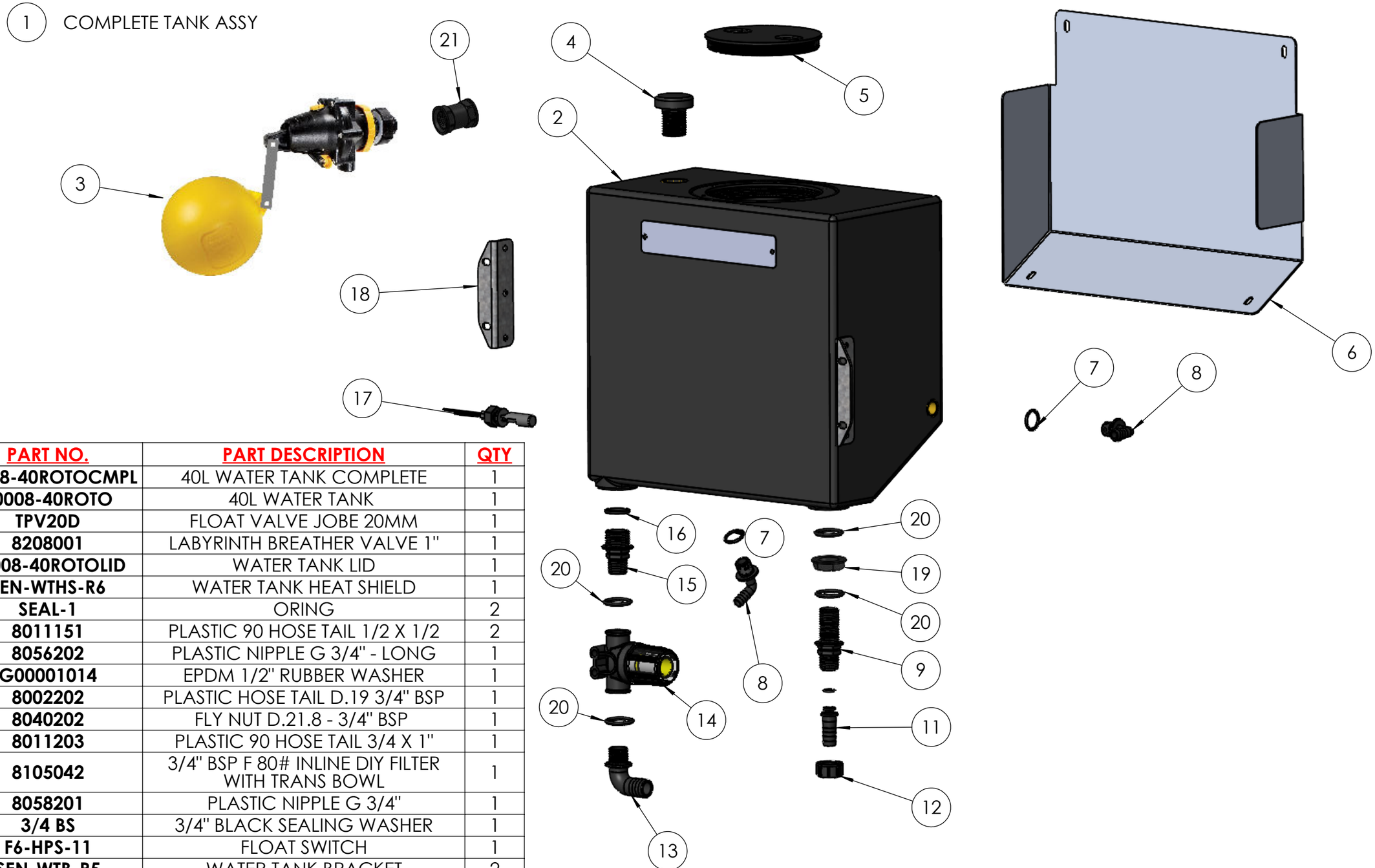

NUMBER	PART NO.	PART DESCRIPTION	QTY
1	**90008-40ROTOCMPL**	40L WATER TANK COMPLETE	1
2	**90008-40ROTO**	40L WATER TANK	1
3	**TPV20D**	FLOAT VALVE JOBE 20MM	1
4	**8208001**	LABYRINTH BREATHER VALVE 1"	1
5	**90008-40ROTOLID**	WATER TANK LID	1
6	**SEN-WTHS-R6**	WATER TANK HEAT SHIELD	1
7	**SEAL-1**	ORING	2
8	**8011151**	PLASTIC 90 HOSE TAIL 1/2 X 1/2	2
9	**8056202**	PLASTIC NIPPLE G 3/4" - LONG	1
10	**G00001014**	EPDM 1/2" RUBBER WASHER	1
11	**8002202**	PLASTIC HOSE TAIL D.19 3/4" BSP	1
12	**8040202**	FLY NUT D.21.8 - 3/4" BSP	1
13	**8011203**	PLASTIC 90 HOSE TAIL 3/4 X 1"	1
14	**8105042**	3/4" BSP F 80# INLINE DIY FILTER WITH TRANS BOWL	1
15	**8058201**	PLASTIC NIPPLE G 3/4"	1
16	**3/4 BS**	3/4" BLACK SEALING WASHER	1
17	**F6-HPS-11**	FLOAT SWITCH	1
18	**SEN-WTB-R5**	WATER TANK BRACKET	2
19	**8042201**	BACK NUT 3/4"	1
20	**G00001014**	O-RING GASKET	4
21	**8054201**	PLASTIC SOCKET G 3/4"	1

SENATOR™ G2

BATTERY PARTS BREAKDOWN

***USED IN GEN 1 FRAME SET.**

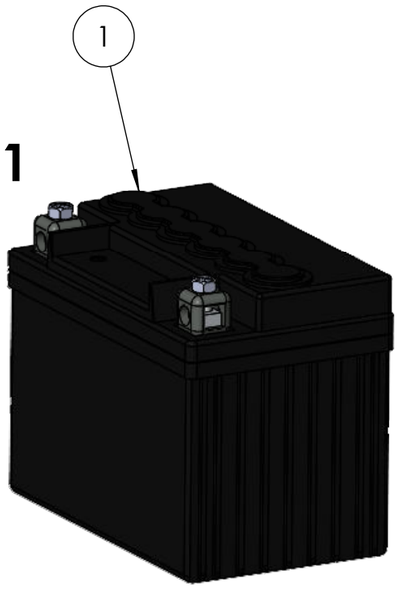

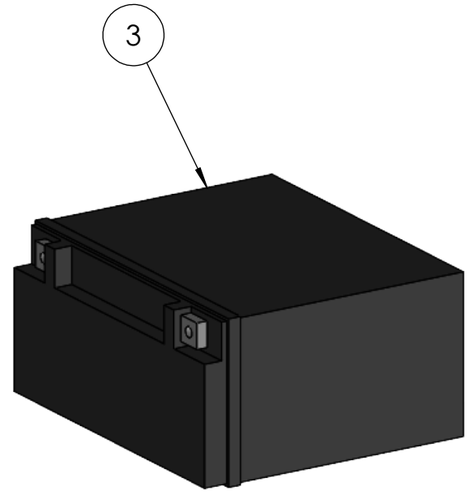

***USED IN GEN 2 FRAME SET.**

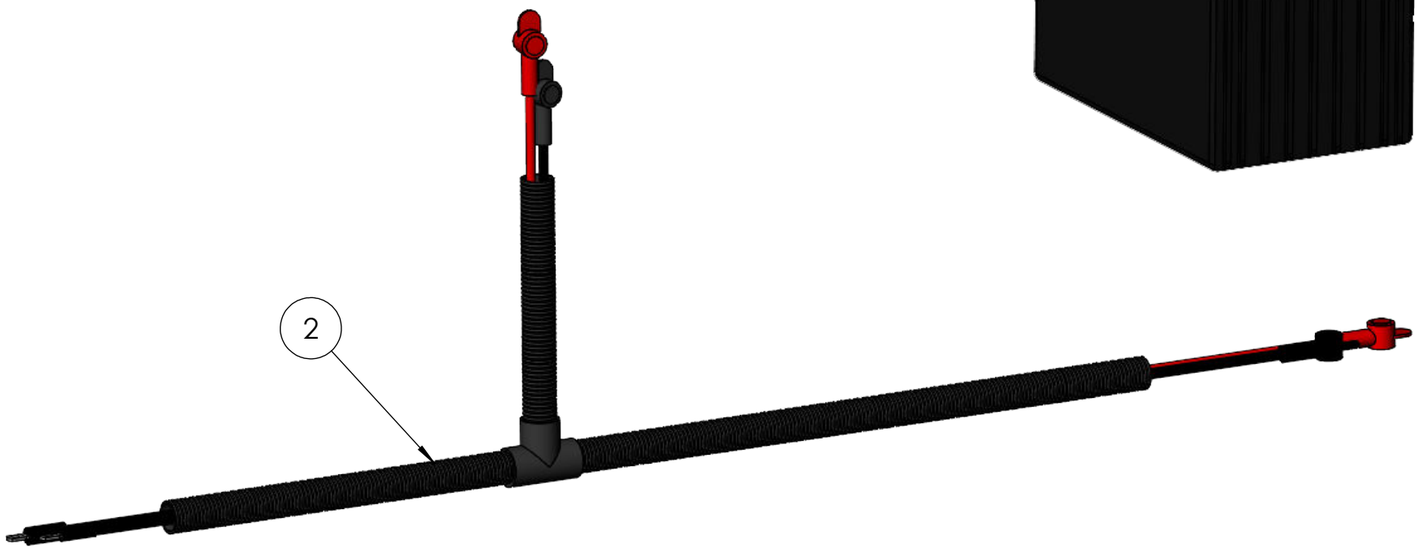

NUMBER	PART NO.	PART DESCRIPTION	QTY
1	**U1R-280**	BATTERY 280CCA RIGHT POST	1
2	**SVTHG2-LOOM**	SENATOR WIRE HARNESS LOOM	1
3	**MX20-3**	12V BATTERY	1

NOTES*

U1R-280 SPECS
CCA: 280
AH(20HR): 26
L X W X H : 196 X 128 X 184
GROUP SIZE: U1
TYPE: LEAD ACID MF

MX20-3 SPECS
CCA: 340
AH(20HR): 18
L X W X H : 205 X 90 X 162
TYPE: AGM MF

SENATOR™ G2

HOSES PARTS BREAKDOWN

6 COMPLETE TAP HOSE
CUT LENGTH 1030mm 1/2"

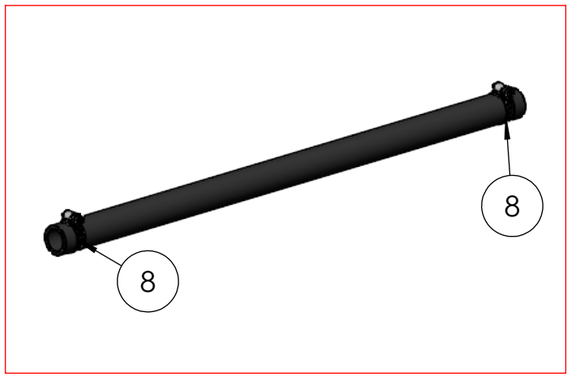

4A COMPLETE GAUGE HOSE
*USED WITH VB350 UNLOADER

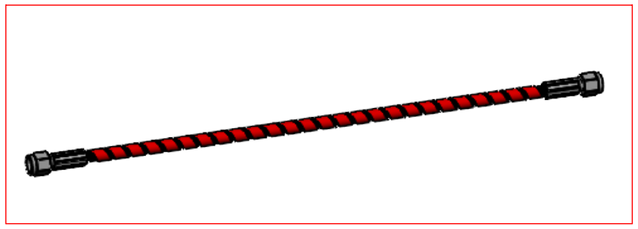

4B COMPLETE GAUGE HOSE
*USED WITH JWUV35050 UNLOADER

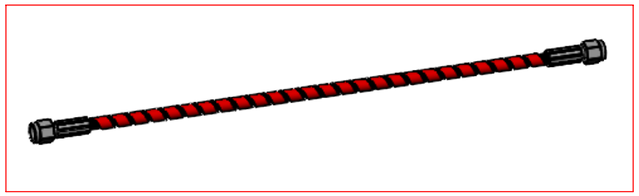

5 COMPLETE WATER TANK INLET HOSE
CUT LENGTH 255mm 1"

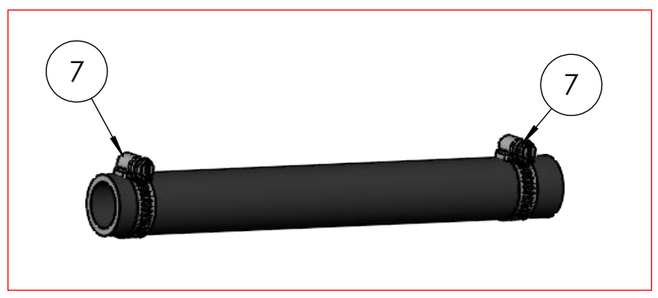

1 COMPLETE HIGH PRESSURE HOSE
CUT LENGTH 410mm 3/8"

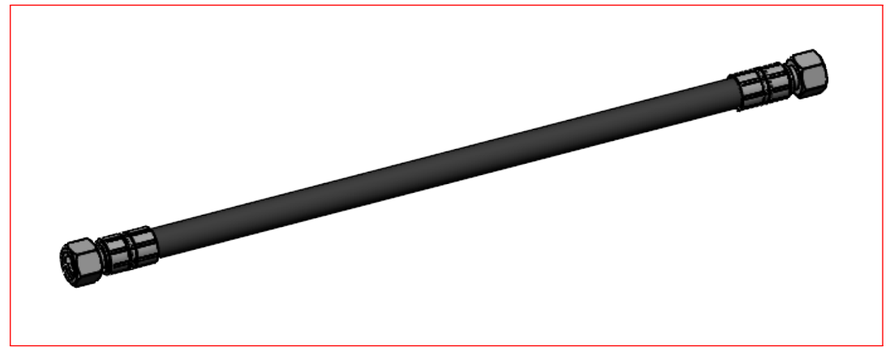

2 COMPLETE INLET HOSE CUT LENGTH 890mm 3/4"

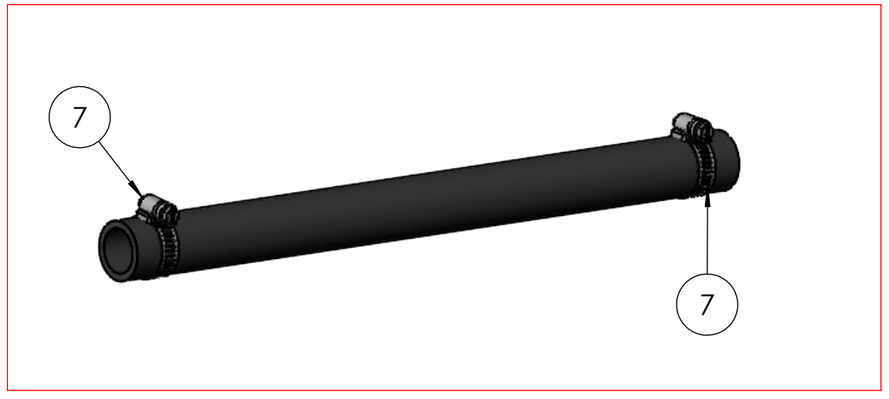

3 COMPLETE BYPASS HOSE CUT LENGTH 1130mm 1/2"

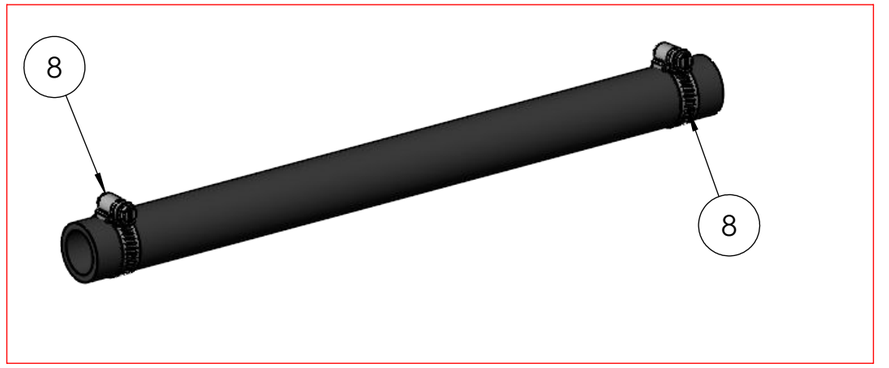

NUMBER	PART NO.	PART DESCRIPTION	QTY
1	**SEN010**	HIGH PRESSURE HOSE ASSY	1
2	**00-920-019-SEN1**	INLET HOSE ASSY	1
3	**00-920-013-SEN2**	BYPASS HOSE ASSY	1
4A	**JWA505**	PRESSURE GAUGE HOSE - 500mm LGTHS - DWB	1
4B	**JWA505-B**	PRESSURE GAUGE HOSE - 500mm LGTHS - DWB	1
5	**02-410-025-SEN4**	WATERTANK INLET HOSE ASSY	1
6	**00-920-013-SEN3**	TAP HOSE ASSY	1
7	**42-101-028**	HOSE CLAMP 18-32MM	2
8	**MH006P**	HOSE CLAMP SUIT 1/2" HOSE	2