A.R. NORTH AMERICA

SXMV 3400 RPM

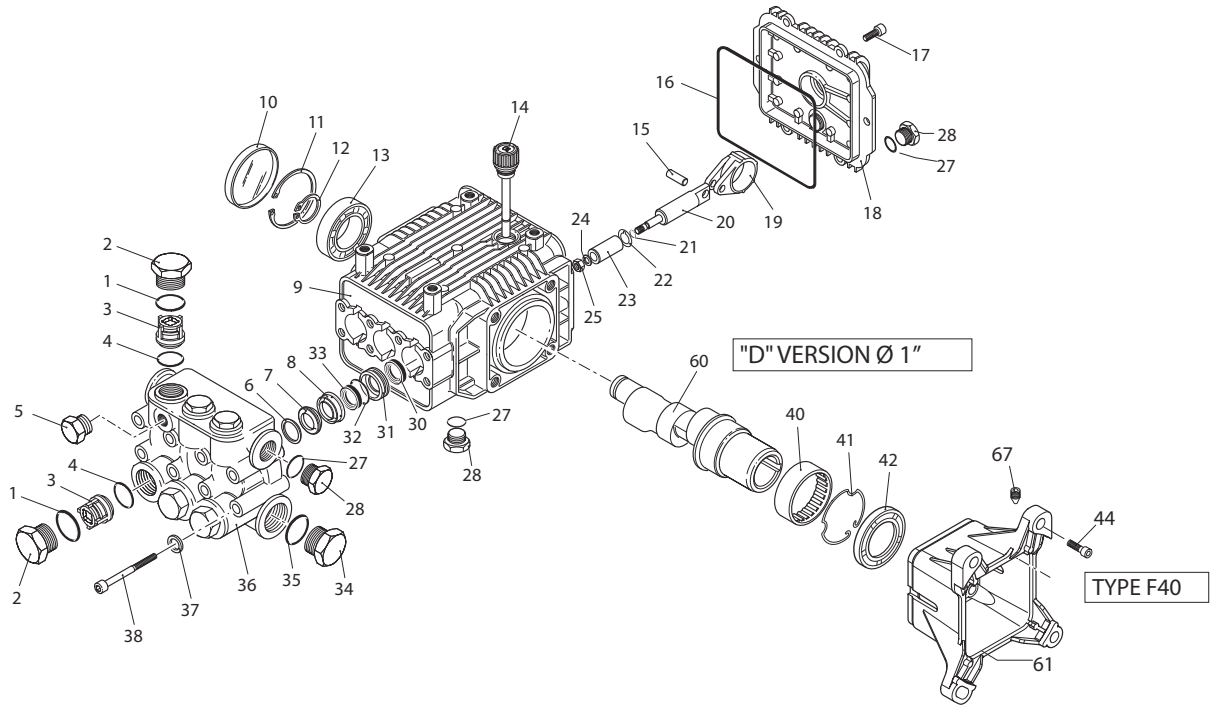

50 - 1

Complete Pump Head

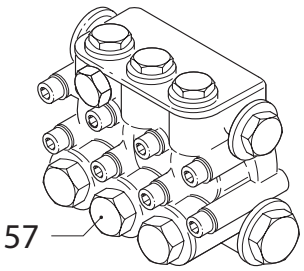

50 - 2

Rear Cover Oil Sight Glass

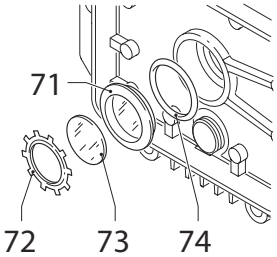

50 - 3

SXMV 3400 RPM PARTS/KITS

Pos	Code	Description		Qty	Note
1	960160	O-Ring	Ø17.86x2.62	6	
2	1269657	Valve cap	w/O-ring, Forged	6	(442 in/lbs)
3	1269050	Complete valve		6	
4	880833	O-Ring	Ø15.54x2.62	6	
5	620301	Plug	1/8" G	1	
6	1780130	Support ring	Ø 15	3	
7	1260130	High pressure packing	Ø 15	3	
8	1780090	Front Piston guide	Ø 15	3	
9	1780010	Pump body		1	
10	1266740	Bearing Cap		1	
11	1260790	Retainer Clip	Øi52	1	
12	1780550	Retainer Clip	Øe 20	1	
13	1780490	Bearing		1	
14	880130	Oil Cap (Vented Dipstick)		1	
15	1780050	Connecting Rod Pin		3	
16	1780510	O-Ring	Ø 106x3	1	
17	1200430	Bolt	M6x16	6	(89 in/lbs)
18	1789010	Complete Rear Cover		1	
19	1780710	Connecting rod	Bronze	3	
20	1780060	Piston Rod		3	
21	480480	O-Ring	Ø4.48x1.78	3	
22	1260091	Washer (slinger)		3	
23	1780070	Piston	Ø 15	3	
24	1260100	Piston washer	copper	3	
25	1260110	Nut	M8	3	(106 in/lbs)
27	740290	O-Ring	Ø14x1.78	3	Included w/ Pos 18, 28
28	1989600	Plug w/O-ring	3/8" G, Brass	3	Included w/ Pos 18
30	1260460	Oil seal	Ø 15	3	
31	1780100	Rear piston guide	Ø 15	3	
32	770260	O-Ring	Ø23.52x1.78	3	
33	1260440	Low pressure seal	Ø 15	3	
34	820361	Plug	1/2" G, Brass	1	
35	180101	O-Ring	Ø17.5x2	1	
36	1781060	Blank Pump head	Brass	1	
37	1381550	Lock Washer		8	
38	1322730	Head bolt		8	
40	1321190	Bearing		1	
41	1321080	Retainer Clip		1	
42	480671	Shaft Oil seal		1	
44	180030	Bolt	M8x20	4	
57	1789209	Complete pump head	Ø 15	1	
60	1780340	Hollow shaft	Ø1", 9 ID Stamp	1	⋎
	1780920	Hollow shaft	Ø1", 8 ID Stamp	1	❍
	1780330	Hollow shaft	Ø1", 7 ID Stamp	1	●
61	2760290	Gas engine flange		1	
67	820440	Set screw	M6x6	1	
71	1260250	Oil sight glass		1	Included w/ Pos 18
72	1260430	Retainer Clip		1	Included w/ Pos 18
73	1780690	Sight Glass Diffuser		1	Included w/ Pos 18

Pos	Code	Description		Qty	Note
74	1140450	O-Ring	Ø20.24x2.62	1	Included w/ Pos 18

Pump Oil Part Number: AR64516 (16 oz)

Pump Oil Capacity 14.5 oz, QTY 1

Pumps are Prefilled with Oil from the Factory.

Change oil every 3-5 months or every 500 hours of operation.

Tightening torque (Tolerance + 0 ÷ -10%

OPTIONAL PARTS/KITS

Pos	Code	Description		Qty	Note
	2776	Viton Water Seals Kit	Ø 15	1	
	2817	Water Seal Kit for up to 180°F	Ø 15 High Temp	1	
	42212	Water Seal Kit for up to 180°F	Ø 15 High Temp (Teflon)	1	
2	1260165	Tapped Valve Cap	1/4" threaded	1	(442 in/lbs)
	2740	Support Ring Kit		1	Pos 6

LEGEND

Symbol	Material	Description	
⋎	-	SXMV3G35, SWMV3G40	Ø 15
❍	-	SXMV3.5G32, SXMV35G35, SXMV3.5G40	Ø 15
●	-	SXMV4G35	Ø 15

Valve Kit 2125

Pos.	Qty
3	6
4	6

Piston Kit 2544

Pos.	Qty
21	3
22	3
23	3
24	3
25	3

Water Seal Kit 2741

Pos.	Qty
7	3
32	3
33	3

Oil Seal Kit 2787

Pos.	Qty
10	1
16	1
30	3
42	1

COUNTRY OF ORIGIN: ITALY
LAST UPDATED: NOVEMBER 2024