ANNOVI REVERBERI
The Power of Experience

SUPREME 90

Version:
Serial number:
Code: **27754**

21/01/2020

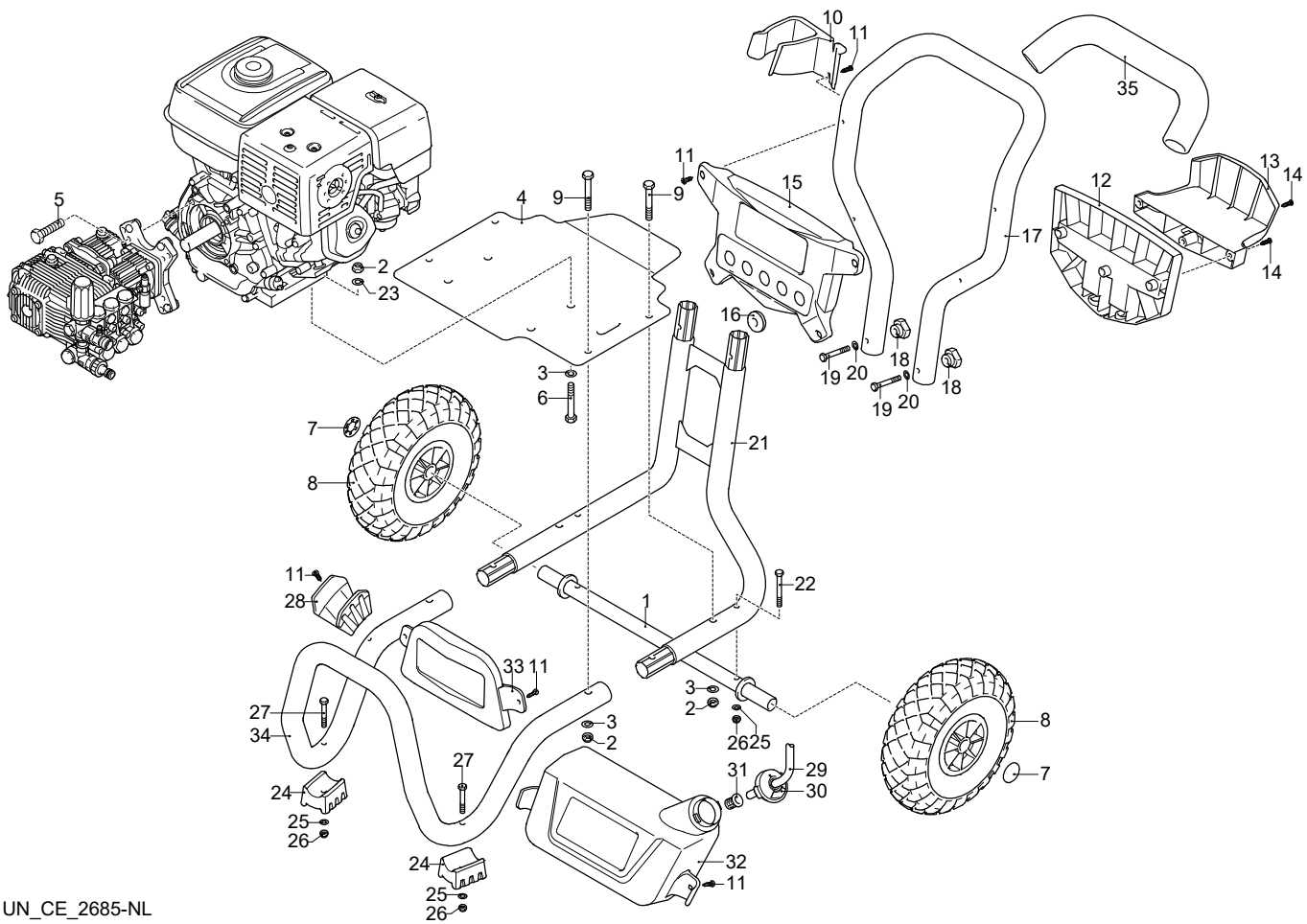

UN_CE_2685-NL

Validity	Pos.	Code	Description	Q
	1	4001111	Axle	1
	2	2240110	Nut	8
	3	390311	Washer	8
	4	4000091	Support	1
	5	961900	Screw	4
	6	200230	Screw	4
	7	50016	Plug	2
	8	4000910	Wheel	2
	9	621780	Screw	4
	10	4000210	Accessories carrier	1
	11	2060200	Screw	8
	12	4000235	Guard	1
	13	4000265	Accessories carrier	1
	14	2100300	Screw	3
	15	4000225	Support	1
	16	4000790	Nozzle holder	5
	17	4000111	Handle	1
	18	50019	Knob	2
	19	4000360	Screw	2
	20	4000860	Washer	2
	21	4000081	Frame	1
	22	4000390	Screw	2
	23	320620	Washer	4
	24	4000400	Foot	2
	25	550331	Washer	4
	26	3000170	Nut	4
	27	4000370	Screw	2
	28	4000240	Accessories carrier	1
	29	2901000	Detergent hose	1
	30	4000750	Plug	1
	31	2000230	Filter	1
	32	4000290	Tank	1
	33	4000303	Guard	1
	34	4000101	Frame	1
	35	4000800	Knob	1

ANNOVI REVERBERI
The Power of Experience

SUPREME 90

Version:
Serial number:
Code: **27754**

21/01/2020

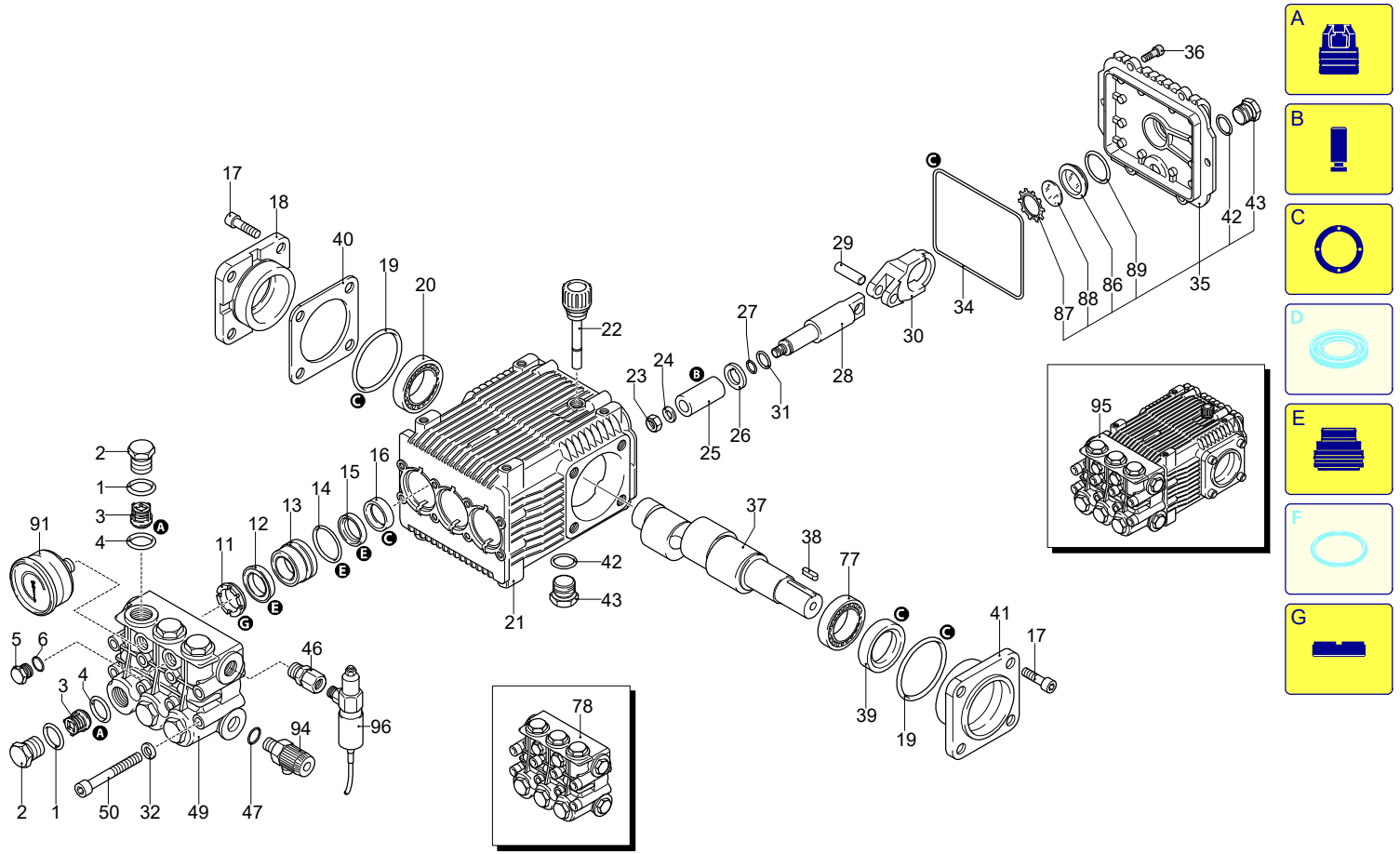

UN_CE_2686-NL

Validity	Pos.	Code	Description	Q
	1	960160	O-ring	6
	2	960850	Plug	6
	3	889052	Complete valve	6
	4	880830	O-ring	6
	5	880581	Plug	1
	6	820510	O-ring	2
	11	960110	Ring	3
	12	1382740	Water seal	3
	13	1380090	Piston guide	3
	14	961240	O-ring	3
	15	880330	Water seal	3
	16	1383130	Ring	3
	17	850370	Screw	8
	18	1380050	Support	1
	19	640030	O-ring	2
	20	2280340	Bearing	1
	21	1382770	Pump body	1
	22	880130	Plug	1
	23	962010	Nut	3
	24	962000	Washer	3
	25	1380940	Piston	3
	26	1380950	Plate	3
	27	600180	O-ring	3
	28	1380920	Piston	3
	29	1380060	Pin	3
	30	1383020	Connecting-rod	3
	31	1080401	Ring	3
	32	1381850	Washer	8
	34	1780510	O-ring	1
	35	1789010	Cover	1
	36	1343510	Screw	6
	37	2280090	Shaft	1
	38	1380520	Key	1
	39	180340	Ring	1
	40	1380120	Shim 0.10 mm	1
	40	1380130	Shim 0.19 mm	1
	40	1380530	Shim 0.25 mm	1
	40	1382810	Shim 0.05 mm	1
	41	1380040	Support	1
	42	740290	O-ring	3
	43	1980740	Plug	2
	46	3960750	Fitting	1
	47	180101	O-ring	1
	49	2281590	Head	1
	50	820150	Screw	8
	77	1383140	Bearing	1
	78	2289281	Head assembly	1
	86	1260250	Level gauge	1
	87	1260430	Ring	1
	88	1780690	Plate	1
	89	1140450	O-ring	1
	91	1381580	Pressure gauge	1
	94	50129	Valve	1
	95	26632	Pump assembly	1
	96	51534	Regulating valve	1
	A	2864	Valve kit	1
	B	2757	Piston kit	1
	C	1855	Oil seal kit	1
	E	1857	Water seal kit	1
	G	1829	Support ring kit	1

ANNOVI REVERBERI
The Power of Experience

SUPREME 90

Version:
Serial number:
Code: **27754**

21/01/2020

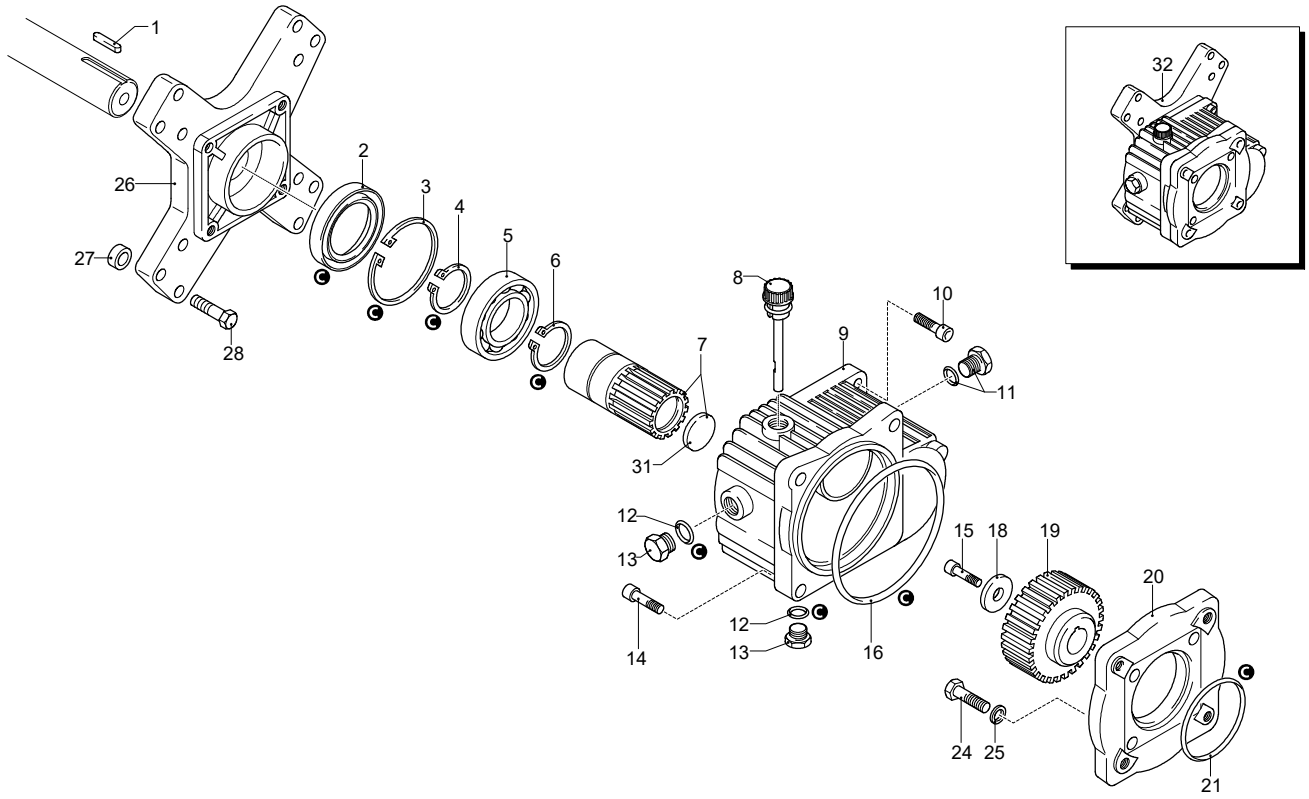

Validity	Pos.	Code	Description	Q
	1	960770	Key	1
	2	961800	Ring	1
	3	961790	Ring	1
	4	320240	Ring	1
	5	961781	Bearing	1
	6	320240	Ring	1
	7	1382420	Pinion	1
	8	1140370	Plug	1
	9	1320910	Box	1
	10	881940	Screw	4
	11	1980290	Level gauge	1
	12	740290	O-ring	2
	13	1980740	Plug	2
	14	160671	Screw	4
	15	880280	Screw	1
	16	1520590	O-ring	1
	18	780230	Washer	1
	19	1321230	Gear	1
	20	1320930	Flange	1
	21	640030	O-ring	1
	24	390450	Screw	4
	25	1260100	Washer	4
	26	1320940	Flange	1
	27	961770	Spacer	4
	28	961900	Screw	4
	31	1382530	Plug	1
	32	1690	Complete reduction gear	1
	C	2525	Oil seal kit	1

UN_CE_0225-HW

ANNOVI REVERBERI
The Power of Experience

SUPREME 90

Version:
Serial number:
Code: **27754**

21/01/2020

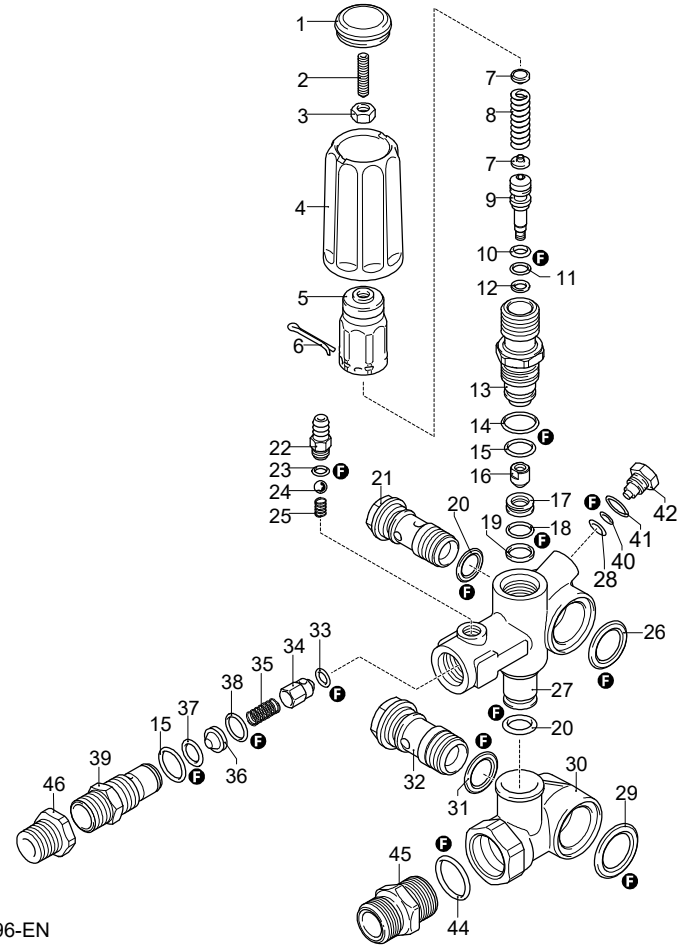

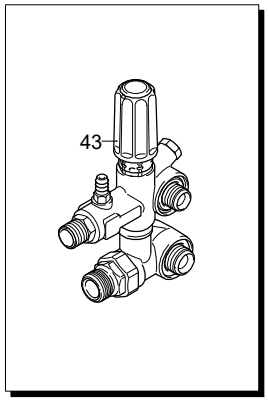

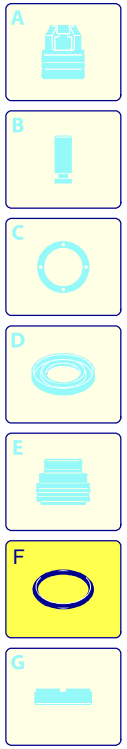

Validity	Pos.	Code	Description	Q
	1	3200500	Plug	1
	2	2840970	Screw	1
	3	1060120	Nut	1
	4	3740030	Knob	1
	5	2500540	Insert	1
	6	2500550	Split pin	1
	7	1980220	Plate	2
	8	2760410	Spring	1
	9	2760400	Piston	1
	10	2260100	O-ring	1
	11	660190	O-ring	1
	12	2760210	Ring	1
	13	2760570	Guide	1
	14	1200690	O-ring	1
	15	394280	O-ring	2
	16	2260070	Shutter	1
	17	2760980	Seat	1
	18	770140	O-ring	1
	19	2760640	Ring	1
	20	390080	O-ring	2
	21	1540272	Screw	1
	22	1982520	Hose tail	1
	23	480480	O-ring	1
	24	1250280	Ball	1
	25	1560520	Spring	1
	26	2260190	O-ring	1
	27	3740010	Valve body	1
	28	1120681	O-ring	1
	29	1540630	O-ring	1
	30	3740020	Body	1
	31	880270	O-ring	1
	32	2260420	Screw	1
	33	2101770	O-ring	1
	34	2760131	Shutter	1
	35	2760200	Spring	1
	36	2760120	Injector	1
	37	1470210	O-ring	1
	38	2760270	O-ring	1
	39	2760230	Fitting	1
	40	2260480	Ring	1
	41	600180	O-ring	1
	42	3740100	Plug	1
	43	24591	Complete valve	1
	44	480440	O-ring	1
	45	3600760	Fitting	1
	46	1122260	Fitting	1
	F	43017	Gasket kit	1

ANNOVI REVERBERI
The Power of Experience

SUPREME 90

Version:
Serial number:
Code: **27754**

21/01/2020

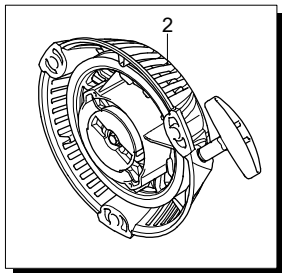

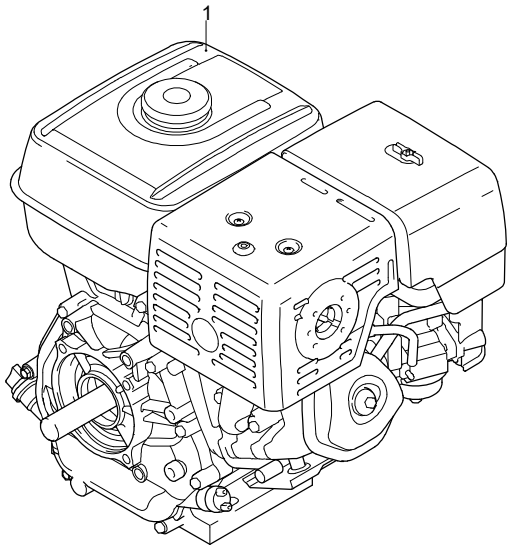

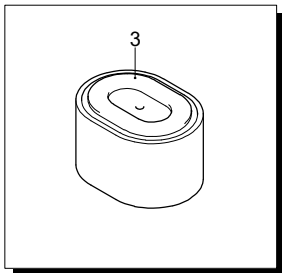

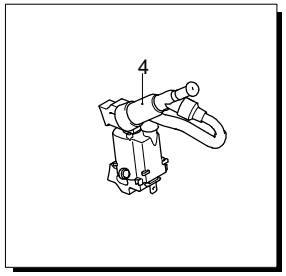

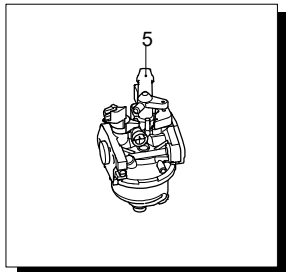

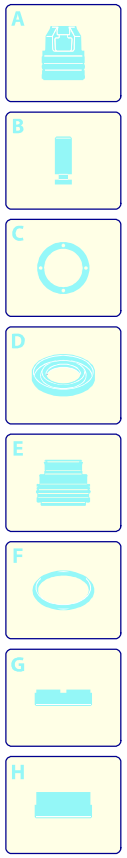

Validity	Pos.	Code	Description	Q
	1	4554	Motor	1
	2	51798	Start	1
	3	51797	Filter	1
	4	51805	Coil	1
	5	51804	Carburetor	1

UN_CE_2198-EN

ANNOVI REVERBERI
The Power of Experience

SUPREME 90

Version:
Serial number:
Code: **27754**

21/01/2020

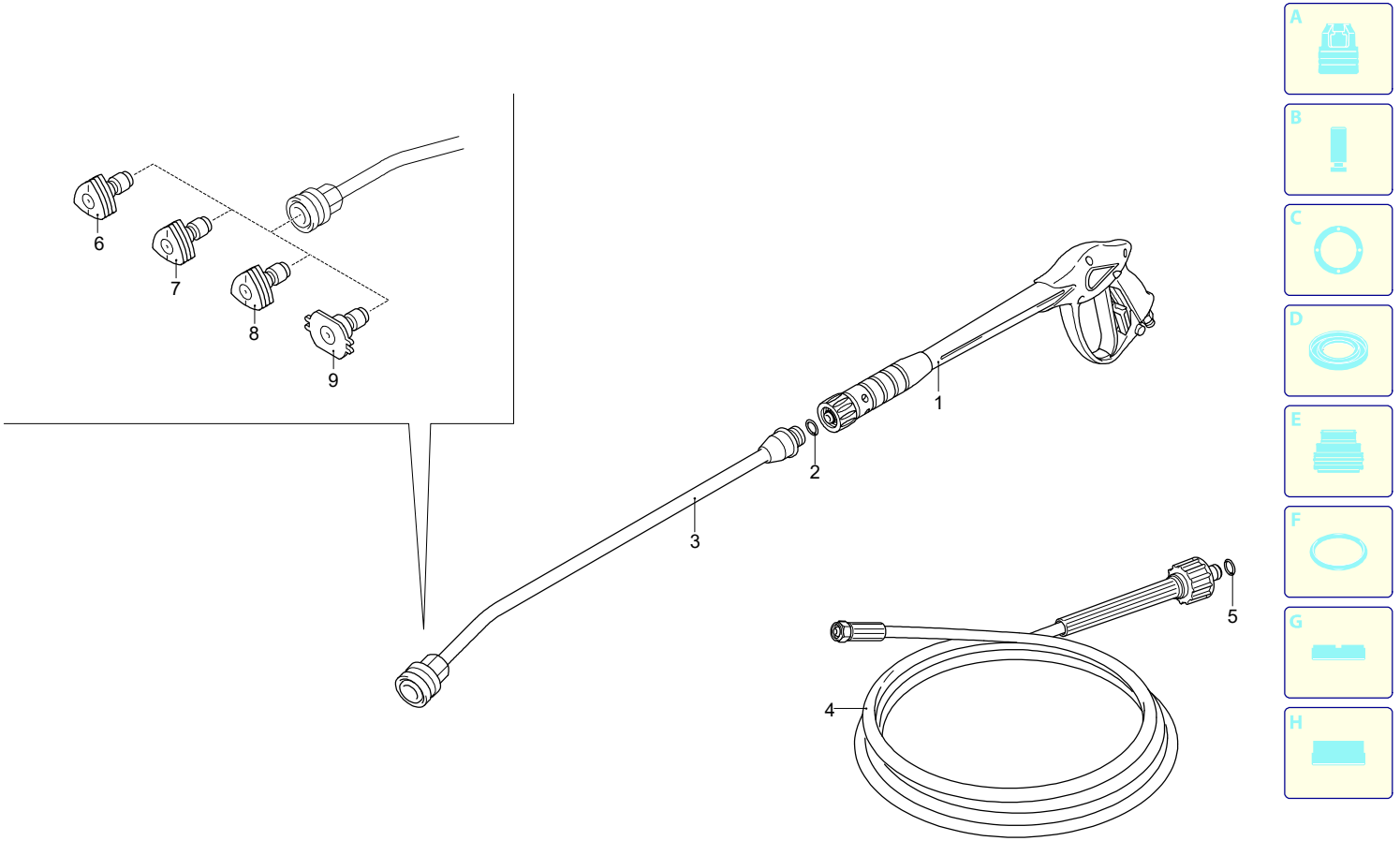

Validity	Pos.	Code	Description	Q
	1	43524	Gun	1
	2	391000	O-ring	1
	3	3600650	Lance	1
	4	1700981	High pressure hose	1
	5	2000570	O-ring	1
	6	3600350	Nozzle (0°)	1
	7	3600360	Nozzle (15°)	1
	8	3600380	Nozzle (40°)	1
	9	3600400	Nozzle (low pressure)	1