ANNOVI REVERBERI
The Power of Experience

SUPREME 40

Version:
Serial number:
Code: **27750**

13/12/2019

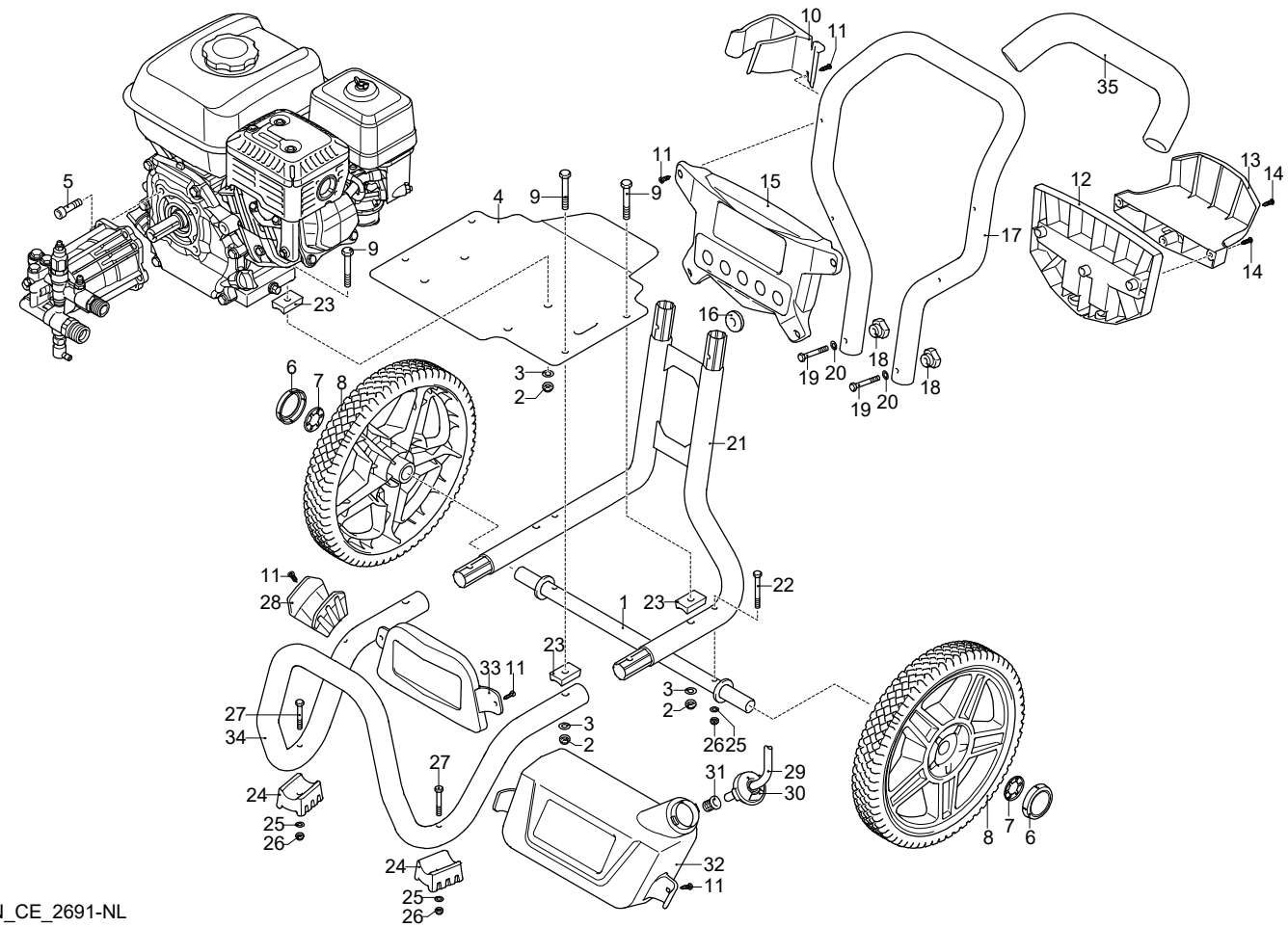

UN_CE_2691-NL

Validity	Pos.	Code	Description	Q
	1	4000121	Axle	1
	2	160311	Nut	8
	3	390311	Washer	8
	4	4000031	Support	1
	5	180432	Screw	4
	6	4000821	Cover	2
	7	380620	Washer	2
	8	4000320	Wheel	2
	9	621780	Screw	4
	10	4000210	Accessories carrier	1
	11	2060200	Screw	8
	12	4000235	Guard	1
	13	4000265	Accessories carrier	1
	14	2100300	Screw	3
	15	4000225	Support	1
	16	4000790	Nozzle holder	5
	17	4000061	Handle	1
	18	50019	Knob	2
	19	4000360	Screw	2
	20	4000860	Washer	2
	21	4000011	Frame	1
	22	4000830	Screw	2
	23	4000350	Spacer	8
	24	4000400	Foot	2
	25	550331	Washer	4
	26	3000170	Nut	4
	27	4000370	Screw	2
	28	4000240	Accessories carrier	1
	29	1270960	Detergent hose	1
	30	4000750	Plug	1
	31	2000230	Filter	1
	32	4000160	Tank	1
	33	4000185	Guard	1
	34	4000051	Frame	1
	35	4000770	Knob	1

ANNOVI REVERBERI
The Power of Experience

SUPREME 40

Version:
Serial number:
Code: **27750**

13/12/2019

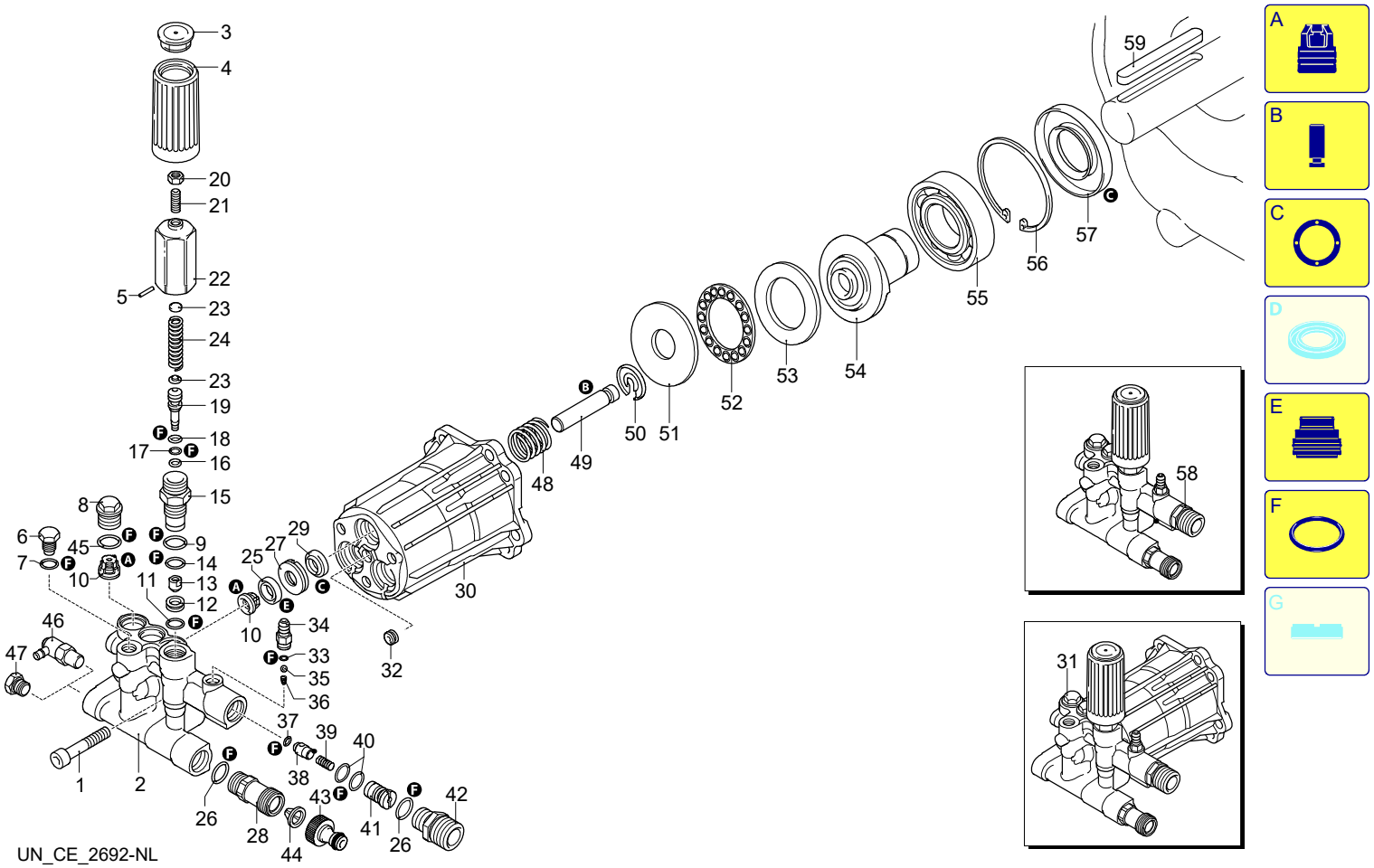

Validity	Pos.	Code	Description	Q
	1	800220	Screw	3
	2	2841620	Head	1
	3	1981770	Plug	1
	4	1981780	Knob	1
	5	1080070	Pin	1
	6	2840830	Screw	1
	7	600180	O-ring	1
	8	2841530	Plug	3
	9	740290	O-ring	1
	10	2849050	Complete valve	6
	11	1470210	O-ring	1
	12	2840770	Seat	1
	13	2840760	Shutter	1
	14	820510	O-ring	1
	15	2840960	Piston guide	1
	16	2760210	Ring	1
	17	660190	O-ring	1
	18	2260100	O-ring	1
	19	2841140	Piston	1
	20	1060120	Nut	1
	21	392840	Screw	1
	22	1980390	Insert	1
	23	1980220	Plate	2
	24	2760410	Spring	1
	25	2200141	Water seal	6
	26	2840890	O-ring	2
	27	2840540	Bushing	3
	28	2900100	Fitting	1
	29	1683500	Oil seal	3
	30	2840231	Pump body	1
	31	26329	Pump assembly	1
	32	3400650	Plug	1
	33	480480	O-ring	1
	34	1982520	Hose tail	1
	35	1250280	Ball	1
	36	1560520	Spring	1
	37	1460431	O-ring	1
	38	2841150	Shutter	1
	39	1343580	Spring	1
	40	800560	O-ring	2
	41	2840340	Injector	1
	42	2840400	Fitting	1
	43	1461470	Fitting	1
	44	1266330	Filter	1
	45	2841520	O-ring	3
	46	2761380	Valve	1
	47	961460	Plug	1
	48	2840060	Spring	3
	49	2840530	Piston	3
	50	2840050	Lock	3
	51	1980130	Fifth wheel	1
	52	1980250	Fifth wheel	1
	53	1980240	Fifth wheel	1
	54	2840730	Wobble plate	1
	55	161060	Bearing	1
	56	161050	Ring	1
	57	2841050	Ring	1
	58	2849113	Head assembly	1
	59	881090	Key	1
	A	42123	Valve kit	1
	B	42161	Piston kit	1
	C	42127	Oil seal kit	1

ANNOVI REVERBERI
The Power of Experience

SUPREME 40

Version:
Serial number:
Code: **27750**

13/12/2019

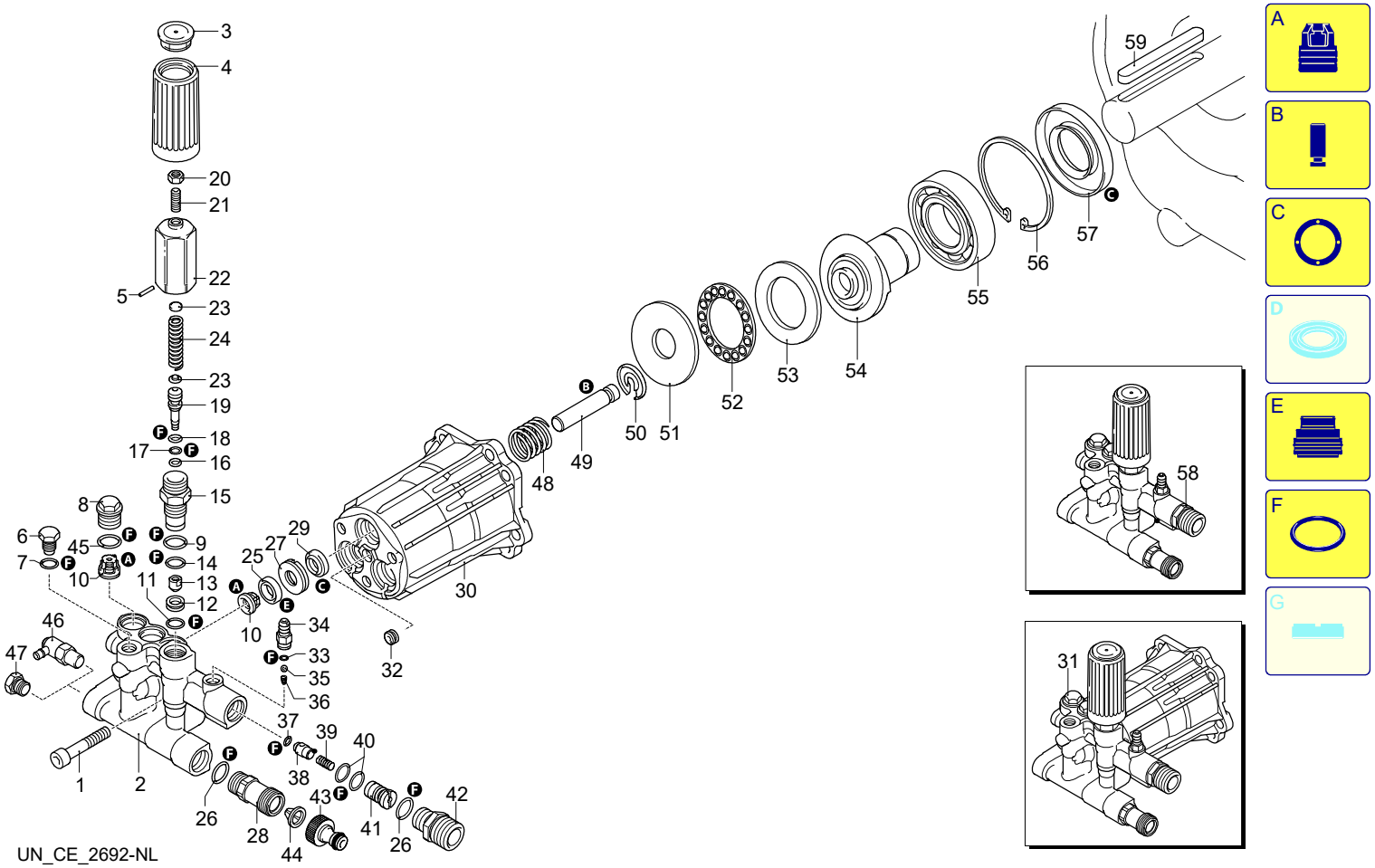

Validity	Pos.	Code	Description	Q
	E	2235	Water seal kit	1
	F	42107	Gasket kit	1

ANNOVI REVERBERI
The Power of Experience

SUPREME 40

Version:
Serial number:
Code: **27750**

13/12/2019

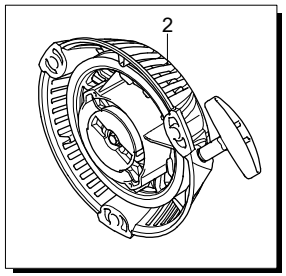

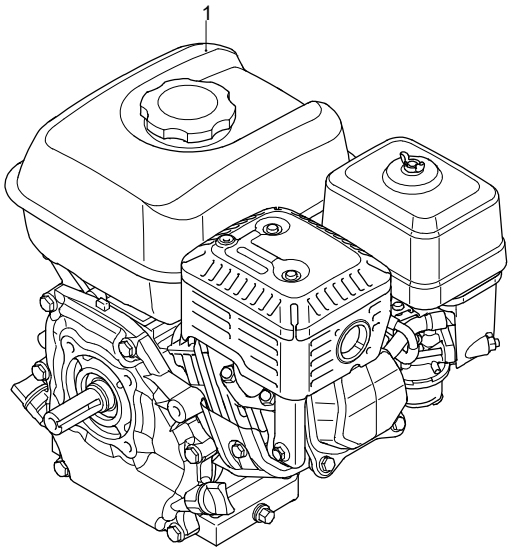

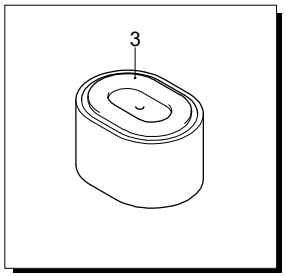

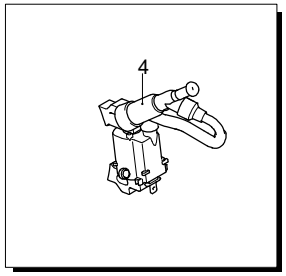

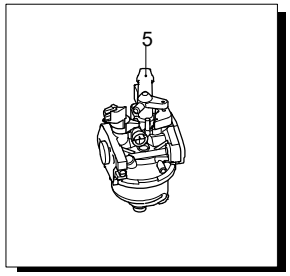

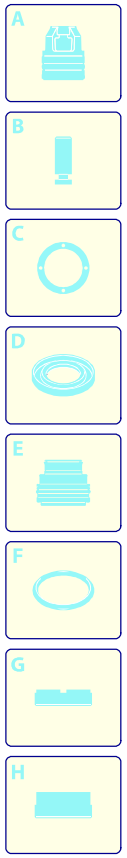

Validity	Pos.	Code	Description	Q
	1	44804	Motor	1
	2	51796	Start	1
	3	51795	Filter	1
	4	51803	Coil	1
	5	52127	Carburetor	1

UN_CE_2103-BN

ANNOVI REVERBERI
The Power of Experience

SUPREME 40

Version:
Serial number:
Code: **27750**

13/12/2019

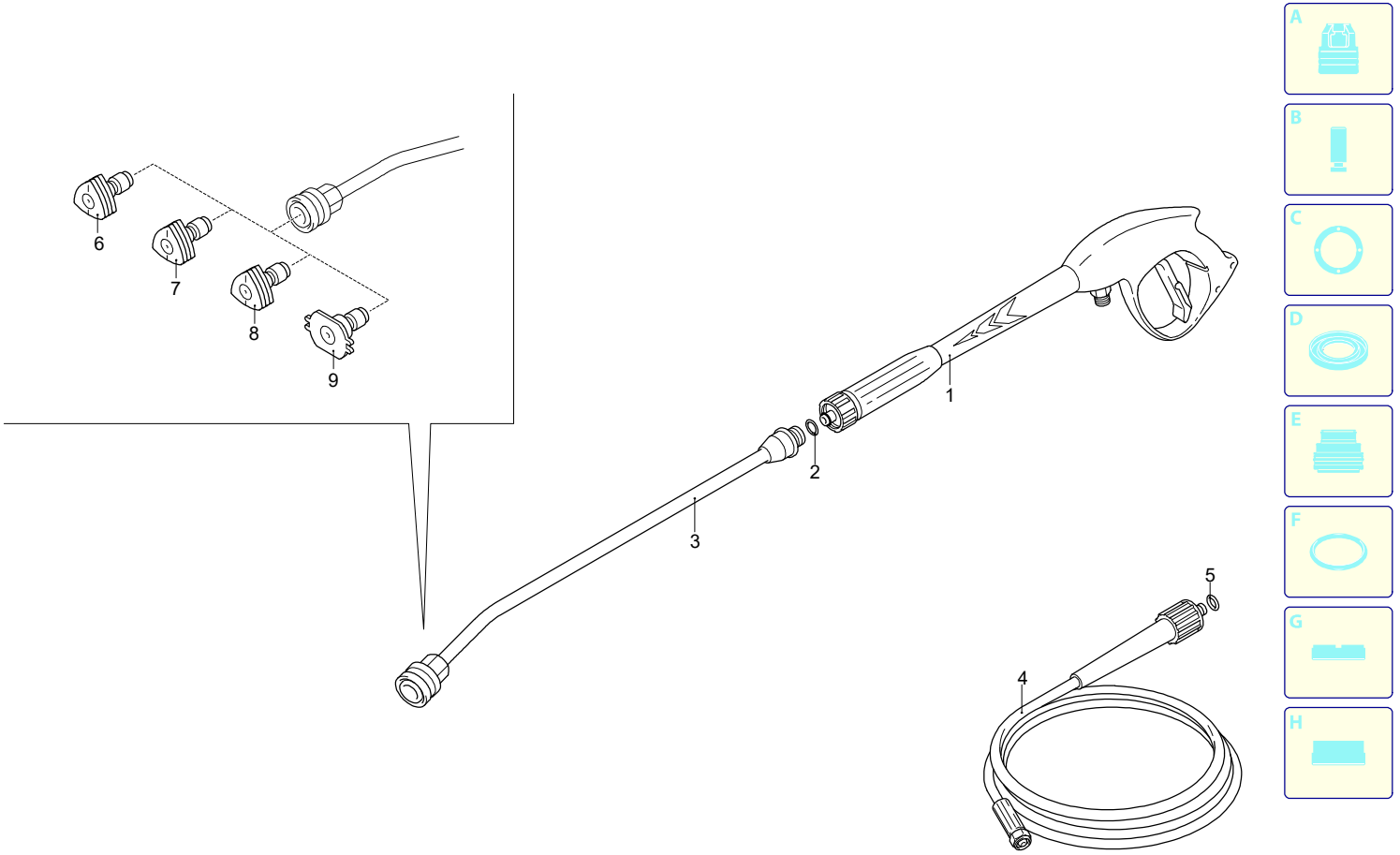

Validity	Pos.	Code	Description	Q
	1	40925	Gun	1
	2	391000	O-ring	1
	3	3600650	Lance	1
	4	3780493	High pressure hose	1
	5	2000570	O-ring	1
	6	3600930	Nozzle (0°)	1
	7	3600940	Nozzle (15°)	1
	8	3600960	Nozzle (40°)	1
	9	3600400	Nozzle (low pressure)	1

UN_CE_2077-AN