Hannay Reels®
The reel leader.

Reel Product News

New Spray Non-Corrosive (SNC) Series Reels

Hannay's new **Spray Non-Corrosive (SNC) Series** reels, constructed primarily of 304-grade stainless steel, are designed specifically for lawn care, agriculture, horticulture, pest control and other spray-related industries.

Competitively priced and comparable in weight to aluminum construction, the SNC series provides a significant advantage in strength and protection in corrosive environments. These reels are designed to handle a variety of applications, including water, pesticides and fertilizer mixes.

Available in both crank and electric-powered rewind, other options include 4-way roller guides, as well as 304 SST constructed stacking kits for up to two reels maximum.



See reverse for features, capacities and reel dimensions.

Email: **reels@hannay.com**
hannay.com
Toll Free: **877-467-3357**
Phone: **518-797-3791**
FAX: **518-797-3259**

MADE IN USA

Hannay Reels®
The reel leader.

Reel Product News

Standard Features:

To handle single 3/8" through 5/8" I.D. hose.

- Lightweight, low-profile reels designed for hose lengths up to 500 ft.
- Primarily 304 SST construction, including discs, axle hub, and welded frame.
- Non-SST components: Drum (Aluminum), Swivel Joint and Bearings (Plated).
- Manual (direct crank) reels include both pin lock and 3-position cam-lock drag brake.
- Electric rewind reels (denoted by letter 'E' at end of model) feature plated chain/sprocket drive with guard.
- Standard inlet: 90° full-flow swivel, 1/2" FNPT threads. Standard outlet: 1/2" FNPT threads.
- Standard pressure rated to 3000 psi (207) bar. Standard fluid temperatures from +32° F to +400 °F (0° C to +204° C).
- Consult factory for other pressures and temperatures.

Options:

- 304 SST stackable frame for up to two reels.*
- SST rollers and roller mounting brackets.
- Drum, swivel joint and bearings all upgradeable to SST.
- Power rewind reels: available in 12 or 24VDC, as well as 115VAC.

***Note:** Up to two reels can be stacked in any combination, allowing for different applications and power rewind preference. Triple-stacking reels by mounting two stacking kits together is not supported and will void all warranties.*

Model SNC-18 ►
manual rewind reel
with optional rollers





◄ Model SNC-18E
Electric Rewind (E) (hose not included)



Model SNC-18 ►
two manual rewind reels shown
with optional stacking frame and rollers

Model Number	Hose Capacity of Reel feet m			Approx. Weight lb. kg			Reel Dimensions*** in. mm				
	I.D. in. mm / O.D. in. mm	3/8 10 / .65 17	1/2 13 / .81 21	5/8 16 / 1 25	NET	UPS/ FedEx SHIP Wt.	Freight SHIP Wt.	A	B	E	F	X
SNC-12		**300** 84	**200** 53	**125** 38	**29** 13	**80*** 36	**64** 29	**17** 432	**12** 305	**17.5** 445	**25.62** 651	**15.5** 394
SNC-18		**400** 122	**300** 91	**200** 61	**31** 14	**98*** 45	**66** 30	**23** 584	**18** 457	**17.5** 445	**31.62** 803	**21.5** 546
SNC-22		**500** 152	**400** 114	**275** 84	**33** 15	**110*** 50	**68** 31	**27** 686	**22** 559	**17.5** 445	**35.62** 905	**25.5** 648
SNC-12E		**300** 84	**200** 53	**125** 38	**47** 21	**80*** 36	**82** 37	**17** 432	**12** 305	**19** 483	**23** 584	**15.5** 394
SNC-18E		**400** 122	**300** 91	**200** 61	**49** 22	**98*** 45	**84** 38	**23** 584	**18** 457	**19** 483	**29** 737	**21.5** 546
SNC-22E		**500** 152	**400** 114	**275** 84	**51** 23	**110*** 50	**86** 39	**27** 686	**22** 559	**19** 483	**33** 838	**25.5** 648

Notes:

1. Specifications subject to change.
2. Other models available than those shown.
3. Dimension "F" is the overall length of standard model reels.
4. Electric rewind reels indicated with 'E' in model suffix (example - SNC-12E).
5. Be sure to check dimensions and weights prior to ordering.

NOTICE: A flexible connector must be used between the inlet pipe and the inlet swivel joint.
* Dimensional weight applies when shipped as a parcel package (via FedEx or UPS Ground).
*** X, Y indicate mounting holes.

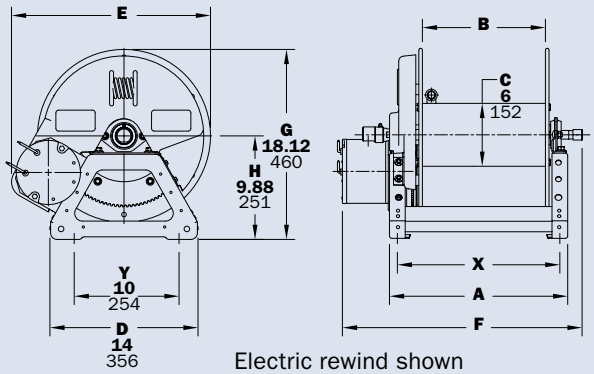

Electric rewind shown

Email: **reels@hannay.com**
hannay.com
Toll Free: **877-467-3357**
Phone: **518-797-3791**
FAX: **518-797-3259**

Form H-1901-SNC REV 5-25

MADE IN USA