ANNOVI REVERBERI
The Power of Experience

SKID-PRO MD 15.20 (RK-TO)

Version:
Serial number:
Code: **26403**

24/04/2017

400 V - 50 Hz

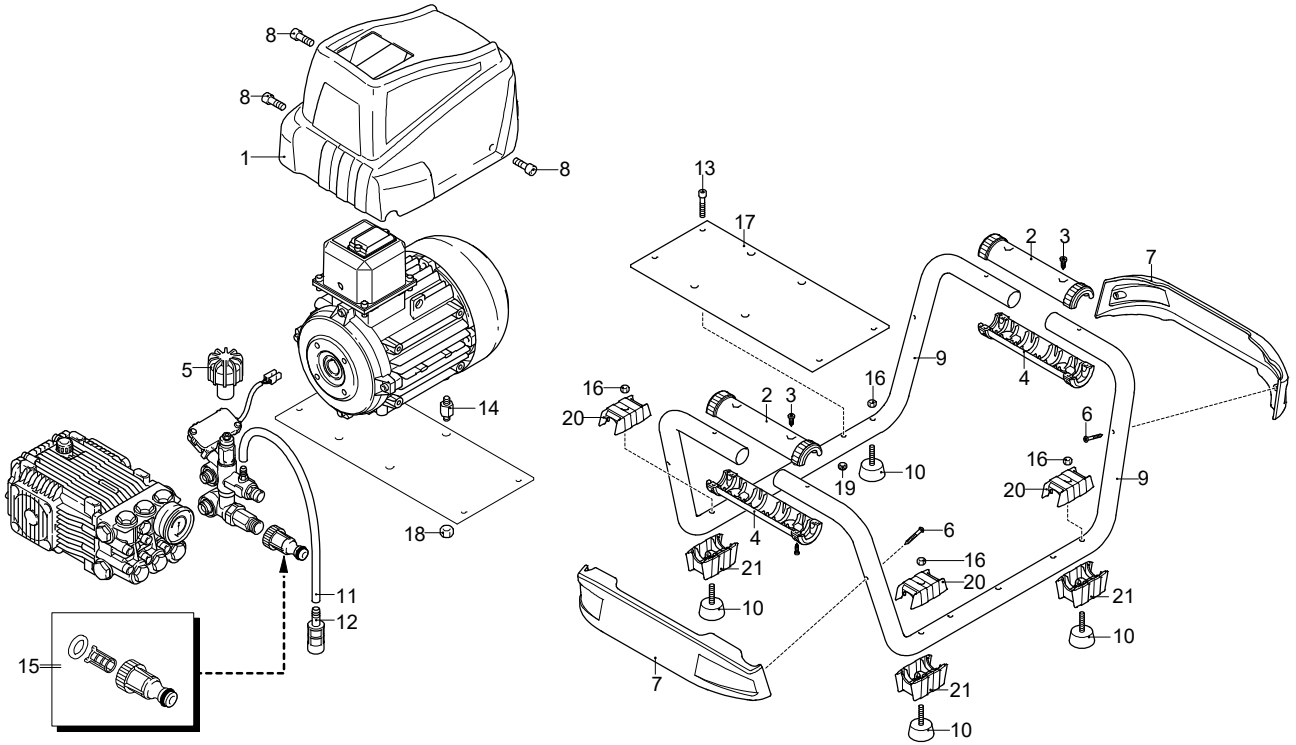

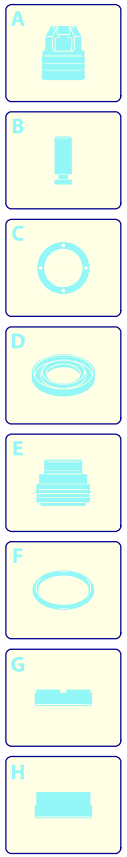

Validity	Pos.	Code	Description	Q
	1	3600671	Casing	1
	2	3600200	Guard	2
	3	2060200	Screw	4
	4	3600040	Guard	2
	5	2360760	Knob	1
	6	2021780	Screw	4
	7	3600321	Guard	1
	8	850250	Screw	3
	9	3601050	Frame	2
	10	3960360	Vibration damper	4
	11	1262790	Detergent hose	1
	12	1341030	Filter	1
	13	1200440	Screw	4
	14	2360580	Stud bolt	4
	15	3082130	Water coupling kit	1
	16	1060120	Nut	4
	17	3601070	Plate	1
	18	380240	Nut	4
	19	3000170	Nut	4
	20	3960350	Guard	4
	21	3960340	Guard	4

UN_CE_2161-DN

ANNOVI REVERBERI
The Power of Experience

SKID-PRO MD 15.20 (RK-TO)

Version:
Serial number:
Code: **26403**

24/04/2017

400 V - 50 Hz

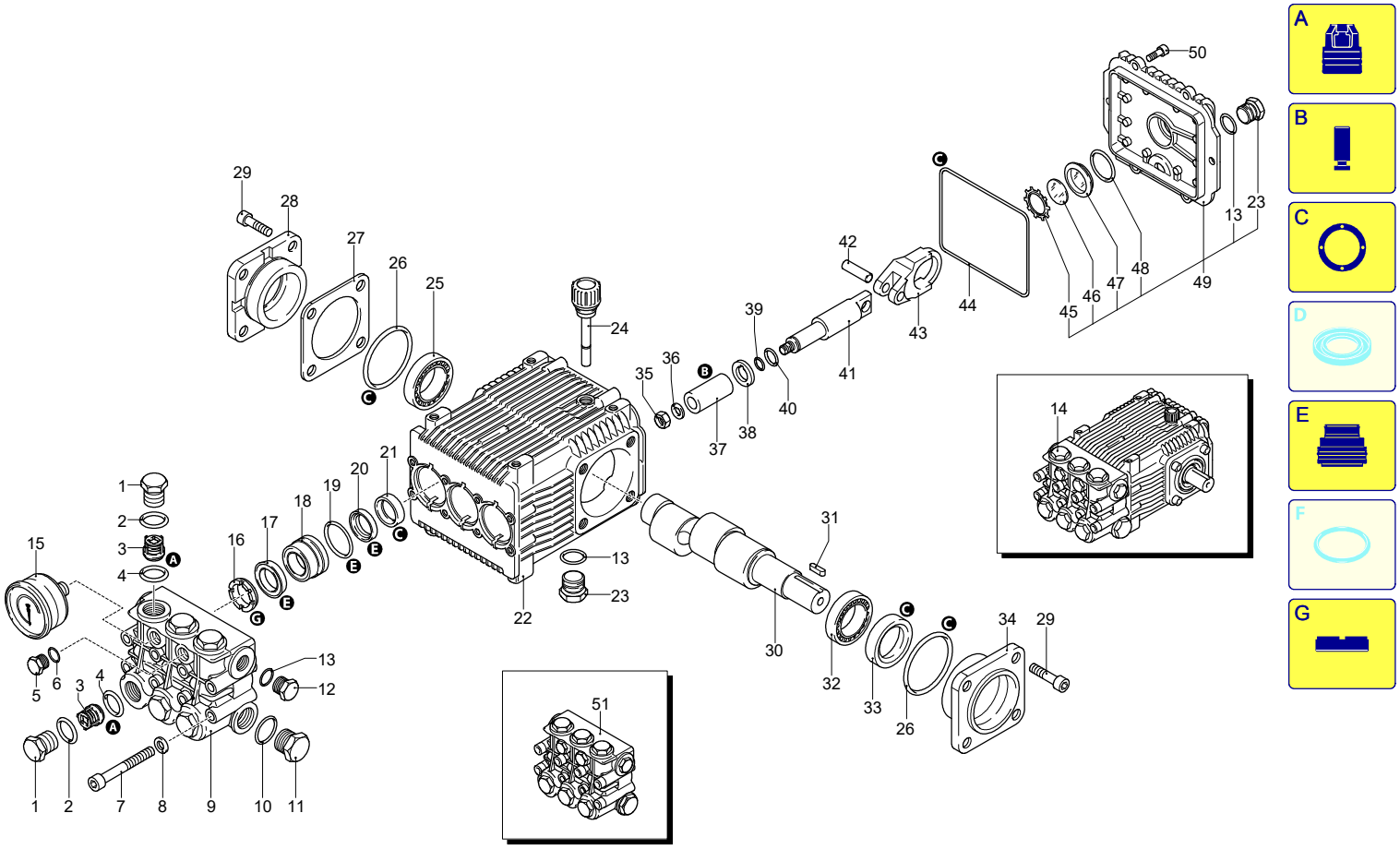

Validity	Pos.	Code	Description	Q
	1	960090	Plug	6
	2	960160	O-ring	6
	3	1389051	Complete valve	6
	4	880830	O-ring	6
	5	880581	Plug	2
	6	820510	O-ring	2
	7	820150	Screw	8
	8	1381850	Washer	8
	9	1381071	Head	1
	10	180101	O-ring	1
	11	820361	Plug	1
	12	1980740	Plug	1
	13	740290	O-ring	3
	14	21102	Pump assembly	1
	15	1381580	Pressure gauge	1
	16	960110	Ring	3
	17	1382740	Water seal	3
	18	1380090	Piston guide	3
	19	961240	O-ring	3
	20	880330	Water seal	3
	21	1383130	Ring	3
	22	1382770	Pump body	1
	23	1980740	Plug	2
	24	880130	Plug	1
	25	2280240	Bearing	1
	26	640030	O-ring	2
	27	1380120	Shim 0.10 mm	1
	27	1380130	Shim 0.19 mm	1
	27	1380530	Shim 0.25 mm	1
	27	1382810	Shim 0.05 mm	1
	28	1380050	Support	1
	29	850370	Screw	8
	30	2280060	Shaft	1
	31	1380520	Key	1
	32	840370	Bearing	1
	33	180340	Ring	1
	34	1380040	Support	1
	35	962010	Nut	3
	36	962000	Washer	3
	37	1380940	Piston	3
	38	1380950	Plate	3
	39	600180	O-ring	3
	40	1080401	Ring	3
	41	1380920	Piston	3
	42	1380060	Pin	3
	43	1383020	Connecting-rod	3
	44	1780510	O-ring	1
	45	1260430	Ring	1
	46	1780690	Plate	1
	47	1260250	Level gauge	1
	48	1140450	O-ring	1
	49	1789010	Cover	1
	50	1343510	Screw	6
	51	1389270	Head assembly	1
	A	2864	Valve kit	1
	B	2757	Piston kit	1
	C	1855	Oil seal kit	1
	E	1857	Water seal kit	1
	G	1829	Support ring kit	1

ANNOVI REVERBERI
The Power of Experience

SKID-PRO MD 15.20 (RK-TO)

Version:
Serial number:
Code: **26403**

24/04/2017

400 V - 50 Hz

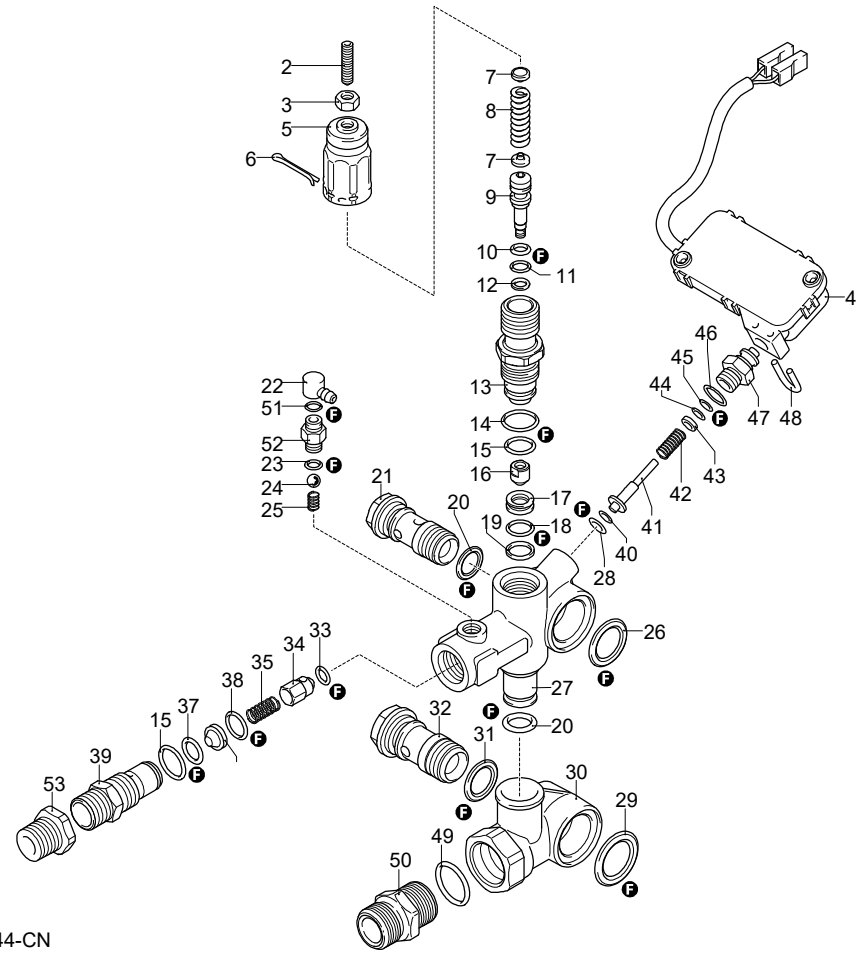

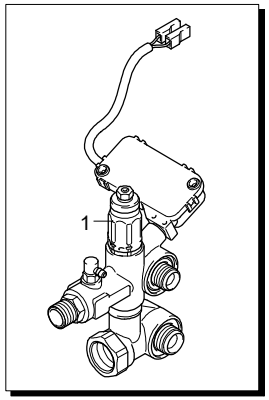

A
B
C
D
E
F
G

UN_CE_2144-CN

Validity	Pos.	Code	Description	Q
	1	24791	Complete valve	1
	2	2840970	Screw	1
	3	1060120	Nut	1
	4	2029752	TSS box assembly	1
	5	2500540	Insert	1
	6	2500550	Split pin	1
	7	1980220	Wobble plate	2
	8	2760410	Spring	1
	9	2760400	Piston	1
	10	2260100	O-ring	1
	11	660190	O-ring	1
	12	2760210	Ring	1
	13	2760570	Guide	1
	14	1200690	O-ring	1
	15	394280	O-ring	5
	16	2260070	Shutter	1
	17	2760980	Seat	1
	18	770140	O-ring	1
	19	2760640	Ring	1
	20	390080	O-ring	2
	21	1540272	Screw	1
	22	2320180	Hose tail	1
	23	480480	O-ring	1
	24	1250280	Ball	1
	25	1560520	Spring	1
	26	2260190	O-ring	1
	27	3740010	Valve body	1
	28	1120681	O-ring	1
	29	1540630	O-ring	1
	30	3740020	Body	1
	31	880270	O-ring	1
	32	2260420	Screw	1
	33	2101770	O-ring	1
	34	2760131	Shutter	1
	35	2760200	Spring	1
	36	2760120	Insert	1
	37	1470210	O-ring	1
	38	2760270	O-ring	1
	39	2760230	Fitting	1
	40	2260480	Ring	1
	41	2260470	Pin	1
	42	2260460	Spring	1
	43	2021650	Washer	1
	44	1260821	O-ring	1
	45	3740050	Ring	1
	46	600180	O-ring	1
	47	3740040	Fitting	1
	48	2022201	Fork	1
	49	480440	O-ring	1
	50	3600760	Fitting	1
	51	480560	O-ring	1
	52	1344620	Fitting	1
	53	1122260	Fitting	1
	F	42780	Gasket kit	1

ANNOVI REVERBERI
The Power of Experience

SKID-PRO MD 15.20 (RK-TO)

Version:
Serial number:
Code: **26403**

24/04/2017

400 V - 50 Hz

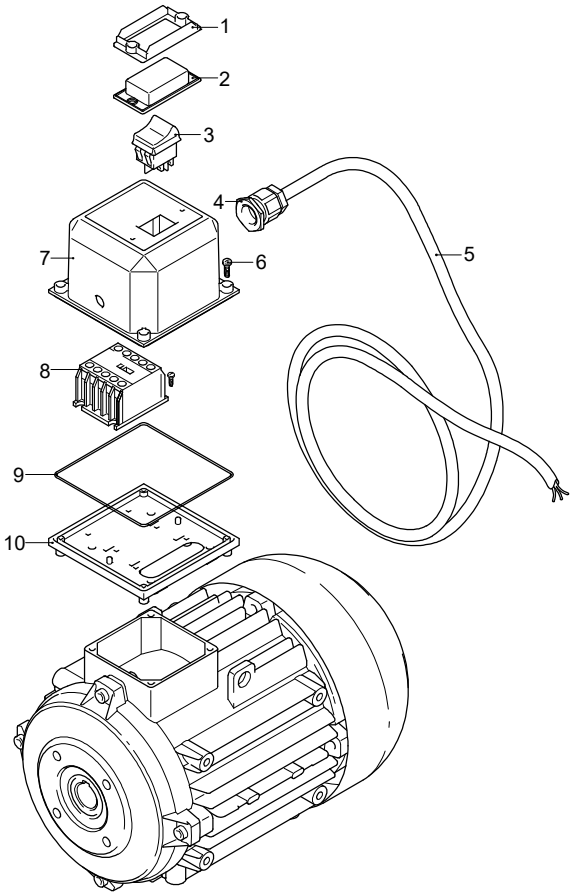

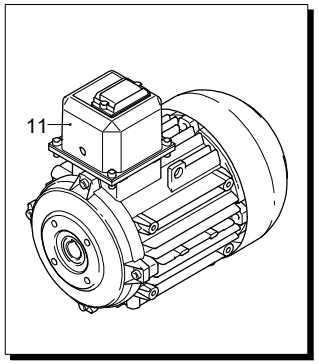

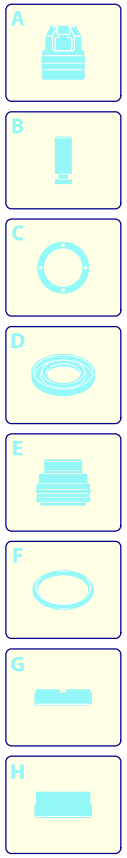

Validity	Pos.	Code	Description	Q
	1	1381940	Frame	1
	2	1381980	Guard	1
	3	1682270	Switch	1
	4	1382380	Cable gland	1
	5	1700640	Cable	1
	6	1261551	Screw	4
	7	1700930	Cover	1
	8	2360950	Mini-contactor	1
	9	1940410	O-ring	1
	10	1700080	Plate	1
	11	44978	Motor	1

ANNOVI REVERBERI
The Power of Experience

SKID-PRO MD 15.20 (RK-TO)

Version:
Serial number:
Code: **26403**

24/04/2017

400 V - 50 Hz

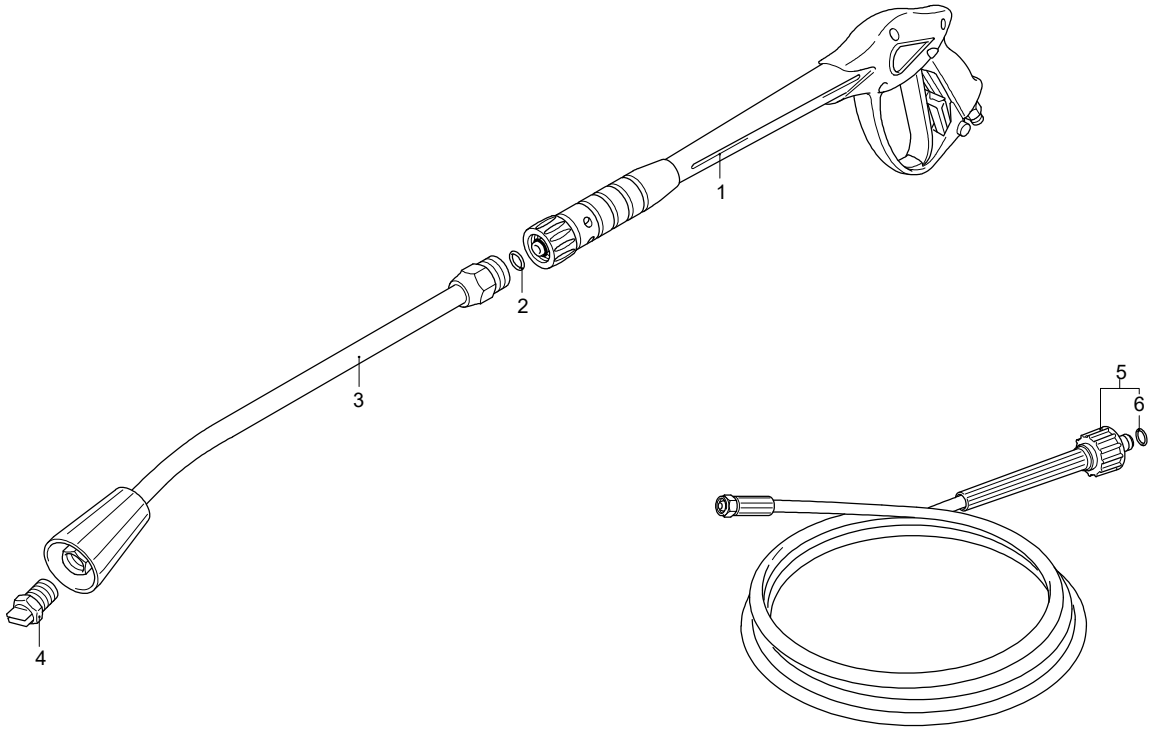

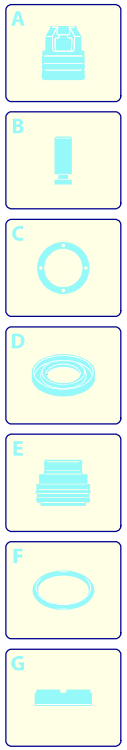

Validity	Pos.	Code	Description	Q
	1	41045	Gun	1
	2	391000	O-ring	1
	3	40826	Lance	1
	4	3086	Nozzle	1
	5	1700980	High pressure hose	1
	6	2000570	O-ring	1

UN_CE_2139-CN