GENERAL PUMP *A member of the Interpump Group*

Sewer Jet Nozzles

"Flusher" Type



SPECIFICATIONS

Max Volume	See Nozzle Chart on Reverse Side
Max Pressure	5000 PSI
Inlet Connection	1/4" NPT-F
Front Spray Nozzles	0
Back Spray Nozzles	3
Weight	.325 lb.

FEATURES/BENEFITS

- Flusher nozzles expel loose debris as hose travels through pipe
- 3 rear facing nozzles advance hose through pipe
- High pressure nozzles are sized to match the flow and and pressure specifications of the equipment
- Heat-treated Stainless Steel nozzles are wear and corrosion resistant
- Great for pipe, sewer and drain cleaning
- Compact design allows for maneuverability and cornering within pipes

Part No.	Nozzle Size
SJN0250F3B1	#2.5
SJN0300F3B1	#3.0
SJN0350F3B1	#3.5
SJN0400F3B1	#4.0
SJN0450F3B1	#4.5
SJN0500F3B1	#5.0
SJN0550F3B1	#5.5

WARNING: High Pressure Systems require a primary pressure regulating device (i.e. regulator, unloader) and a secondary pressure relief device (i.e. pop-off valve, relief valve). Failure to install such relief devices properly could result in personal injury or damage to pump or property. GP does not assume any liability or responsibility for the operation of a customer's high pressure system.

Dimensions

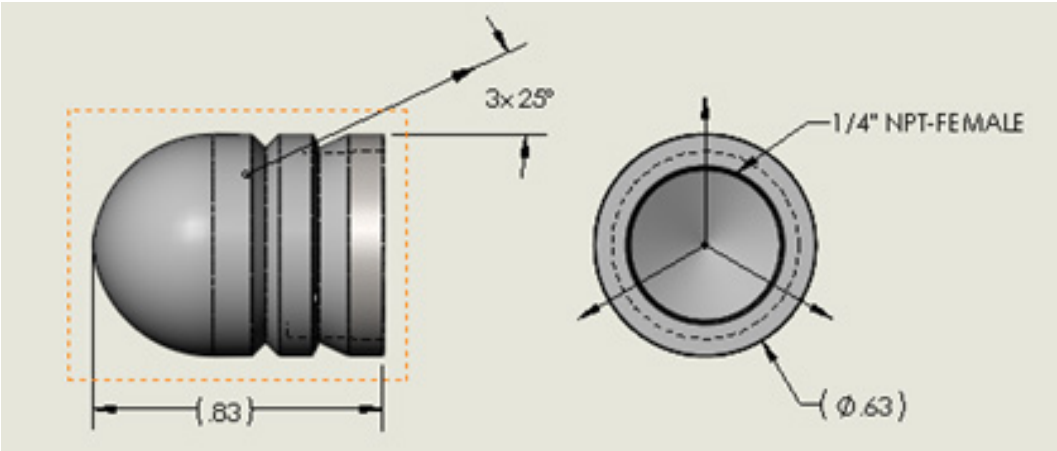

SEWER JET NOZZLES

GENERAL PUMP *A member of the Interpump Group*

Sewer Jet Nozzles
"Flusher" Type

NOZZLE CHART

Nozzle Size	Orifice Dia.	40 PSI	100 PSI	250 PSI	500 PSI	600 PSI	700 PSI	800 PSI	1000 PSI	1200 PSI	1500 PSI	2000 PSI	2500 PSI	3000 PSI	3500 PSI	4000 PSI	5000 PSI
2.0	.034	0.20	0.32	0.50	0.71	0.77	0.84	0.89	1.00	1.10	1.22	1.41	1.58	1.73	1.87	2.00	2.24
2.5	.039	.0.25	0.40	0.63	0.88	0.97	1.05	1.12	1.25	1.37	1.53	1.77	1.98	2.17	2.34	2.50	2.80
3.0	.043	***0.30***	***0.47***	***0.75***	***1.06***	***1.16***	***1.25***	***1.34***	***1.50***	***1.64***	***1.84***	***2.12***	***2.37***	***2.60***	***2.81***	***3.00***	***3.35***
3.25	.045	0.33	0.51	0.81	1.15	1.26	1.36	1.45	1.63	1.78	1.99	2.30	2.57	2.81	3.04	3.25	3.63
3.5	.048	0.35	0.55	0.88	1.24	1.26	1.46	1.57	1.75	1.92	2.14	2.47	2.77	3.03	3.27	3.50	3.91
3.75	.050	0.38	0.59	0.94	1.33	1.45	1.57	1.68	1.88	2.05	2.30	2.65	2.96	3.25	3.51	3.75	4.17
4.0	.052	***0.40***	***0.63***	***1.00***	***1.41***	***1.45***	***1.67***	***1.79***	***2.00***	***2.16***	***2.45***	***2.83***	***3.16***	***3.46***	***3.74***	***4.00***	***4.47***
4.5	.055	***0.45***	***0.71***	***1.13***	***1.59***	***1.74***	***1.88***	***2.01***	***2.25***	***2.46***	***2.76***	***3.18***	***3.56***	***3.90***	***4.21***	***4.50***	***5.03***
5.0	.057	***0.50***	***0.79***	***1.25***	***1.77***	***1.94***	***2.09***	***2.24***	***2.50***	***2.74***	***3.06***	***3.54***	***3.95***	***4.33***	***4.68***	***5.00***	***5.59***
5.5	.060	***0.55***	***0.87***	***1.38***	***1.94***	***2.13***	***2.30***	***2.46***	***2.75***	***3.01***	***3.37***	***3.89***	***4.35***	***4.76***	***5.14***	***5.50***	***6.15***
6.0	.062	0.60	0.95	1.50	2.12	2.32	2.51	2.68	3.00	3.29	3.67	4.24	4.74	5.20	5.61	6.00	6.71
6.5	.064	0.65	1.03	1.63	2.30	2.52	2.72	2.91	3.25	3.56	3.98	4.60	5.14	5.63	6.08	6.50	7.27
7.0	.067	0.70	1.11	1.75	2.47	2.71	2.93	3.13	3.50	3.83	4.29	4.95	5.53	6.06	6.55	7.00	7.83
7.5	.070	0.75	1.19	1.88	2.65	2.90	3.14	3.35	3.75	4.11	4.59	5.30	5.93	6.50	7.02	7.50	8.39
8.0	.072	0.80	1.26	2.00	2.83	3.10	3.35	3.58	4.00	4.38	4.90	5.66	6.32	6.93	7.48	8.00	8.94
8.5	.074	0.85	1.34	2.13	3.01	3.29	3.56	3.80	4.25	4.66	5.21	6.01	6.72	7.36	7.95	8.50	9.50
9.0	.076	0.90	1.42	2.25	3.18	3.49	3.76	4.02	4.50	4.93	5.51	6.36	7.12	7.79	8.42	9.00	10.06
9.5	.078	0.95	1.50	2.38	3.36	3.68	3.97	4.25	4.75	5.20	5.82	6.72	7.51	8.23	8.89	9.50	10.62
10.0	.080	1.00	1.58	2.50	3.54	3.87	4.18	4.47	5.00	5.48	6.12	7.07	7.91	8.66	9.35	10.00	11.18
11.0	.083	1.10	1.74	2.75	3.89	4.26	4.60	4.92	5.50	6.02	6.74	7.78	8.70	9.53	10.29	11.00	12.30
12.0	.087	1.20	1.90	3.00	4.24	4.65	5.02	5.37	6.00	6.57	7.35	8.49	9.49	10.39	11.22	12.00	13.42
12.5	.089	1.25	1.98	3.13	4.42	4.84	3.23	5.59	6.25	6.85	7.65	8.84	9.88	10.83	11.69	12.50	13.98
13.0	.091	1.30	2.06	3.25	4.60	5.03	5.44	5.81	6.50	7.12	7.96	9.19	10.28	11.26	12.16	13.00	14.53
14.0	.093	1.40	2.21	3.50	4.95	5.42	5.86	6.26	7.00	7.67	8.57	9.90	11.07	12.12	13.10	14.00	15.65
15.0	.096	1.50	2.37	3.75	6.30	5.81	6.27	6.71	7.50	8.22	9.19	10.61	11.86	12.99	14.03	15.00	16.77
20.0	.109	2.00	3.16	5.00	7.07	7.75	8.37	8.94	10.00	10.95	12.25	14.14	15.81	17.32	18.71	20.00	22.36
25.0	.125	2.50	3.95	6.25	8.84	9.68	10.46	11.18	12.50	13.69	15.31	17.68	19.76	21.65	23.39	25.00	27.95
30.0	.141	3.00	4.74	7.50	10.61	11.62	12.55	13.42	15.00	16.43	18.37	21.12	23.72	25.98	28.06	30.00	33.54
40.0	.156	4.00	6.32	10.00	14.14	15.49	16.73	17.89	20.00	21.91	24.49	28.28	31.62	34.64	37.42	40.00	44.72
50.0	.172	5.00	7.91	12.50	17.68	19.36	20.92	22.36	25.00	27.39	30.62	35.36	39.53	43.30	46.77	50.00	55.90
60.0	.188	6.00	9.49	15.00	21.21	23.24	25.10	26.83	30.00	32.96	36.74	42.43	47.43	51.96	56.12	60.00	67.08

GPM

GENERAL PUMP 1174 Northland Drive • Mendota Heights, MN 55120
Phone: 651.686.2199 • Fax: 800.535.1745 • e-mail: sales@gpcompanies.com • www.generalpump.com

Ref 310180 Rev. C
03-24

GENERAL PUMP