GENERAL PUMP *A member of the Interpump Group*

SEC Series

Self-priming, cast iron centrifugal water pumps with built-in ejector

FEATURES

- Heavy duty cast-iron construction
- Plastic impeller and diffuser
- Efficient graphite and ceramic mechanical seal
- Buna-N elastomers for exceptional compatibilty
- Large NPT-F ports
- Priming port

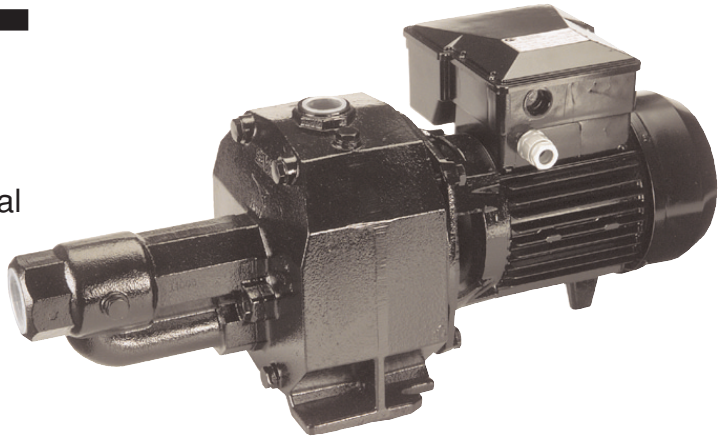

SPECIFICATIONS

Part Number	Inlet	Outlet	Impeller	Horse Power	RPM	Volts	Max psi	Max Temp °F(°C)	Mechanical Seal	Impeller Material	Body Material
SEC1201511	1.5"	1"	4 1/4"	1.5 HP	3450	110	115	122(50)	Graphite / Ceramic	Plastic / Plastic Diffuser	Cast Iron
SEC1202031	1.5"	1"	4 1/4"	2.0 HP	3450	230	115	122(50)	Graphite / Ceramic	Plastic / Plastic Diffuser	Cast Iron

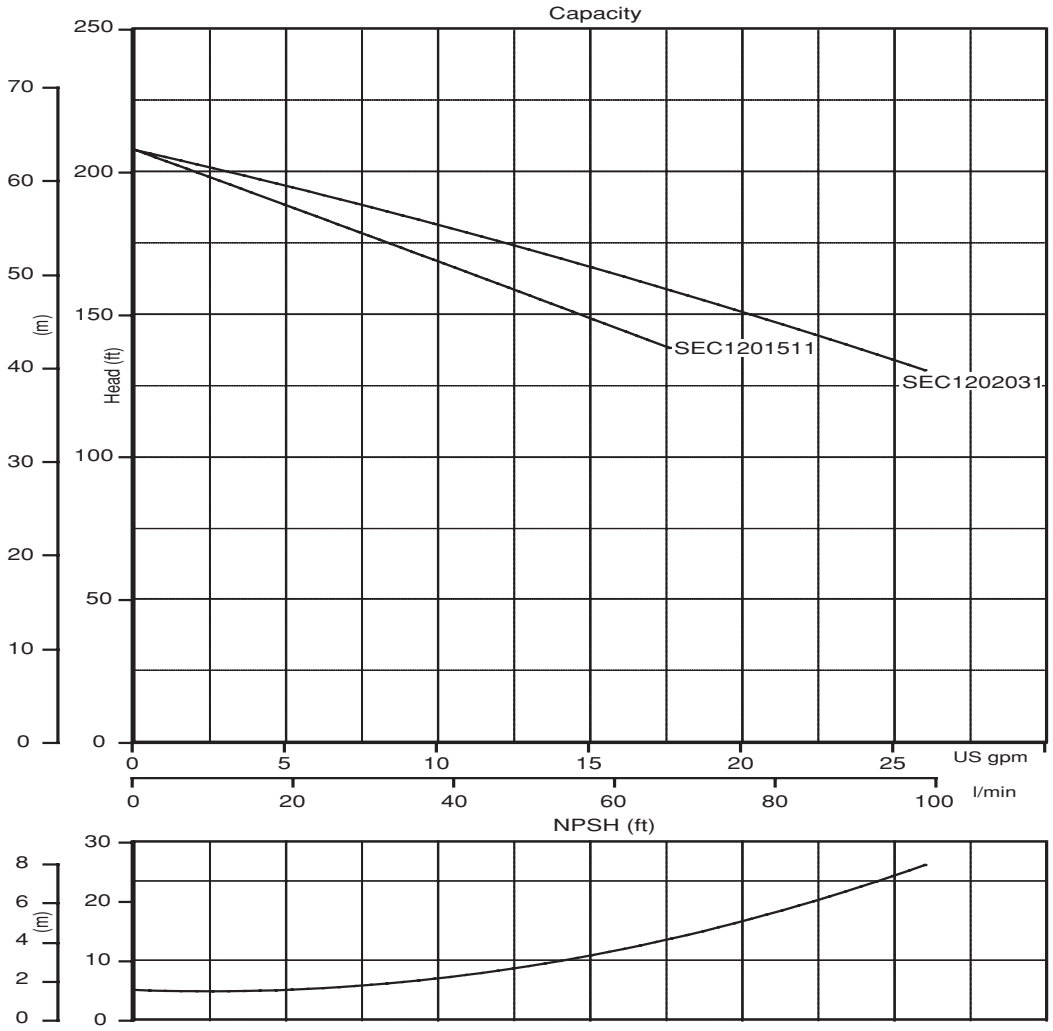

GP CENTRIFUGALS

GENERAL PUMP

SEC Series

GENERAL PUMP *A member of the Interpump Group*

Self-priming, cast iron centrifugal water pumps with built-in ejector

PARTS LIST

Item	Part No.	Description	Qty
5.	W51060041	Pump Body, Cast Iron	1
8.	W81100090	Plug, Brass	1
9.	W57540040	Gasket, Aluminum	1
10.	W57411005	Impellar Nut, Brass	1
10a.	W57410500	Nut	1
12.	W51300101	Impeller, Plastic SEC1201511	1
	W51300121	Impeller, Plastic SEC1202031	
13.	W54250140	Rotating Mechanical Seal, Graphite	1
14.	W54730580	O-Ring	1
14a.	W54730060	O-Ring	1
15.	W54200120	Fixed Mechanical Seal, Ceramic	1
17.	W54300120	Deflector	1
18.	W53200080	Flange, Cast Iron	1
19.	W57002520	Screw	4
19a.	W57002510	Screw	2
20.	W53400140	Bearing	2
21.	W57800401	Key, 304 SS	1
22.	W50101100	Pump & Motor Shaft, SEC1201511	1
	W50101200	Pump & Motor Shaft, SEC1202031	
23.	W54760955	Flat Gasket, SEC1201511	1
	W54760430	Flat Gasket, SEC1202031	1
23a.	W54760435	Flat Gasket	1
24.	W56800080	Circlip	1
25.	W50001141	Motor Casing w/ Stator, SEC1201511	1
	W50001528	Motor Casing w/ Stator, SEC1202031	
26.	W55300240	Foot, Plastic	1
27.	W57100351	Tie-rod	4
29.	W55130030	Terminal board cover	1
30.	W55100305	Terminal board	1
31.	W55170202	Strain Relief	1
32.	W53220060	Rear Motor Cover, Aluminum	1
33.	W55000080	Motor Fan, Plastic	1
35.	W55050080	Fan cover	1

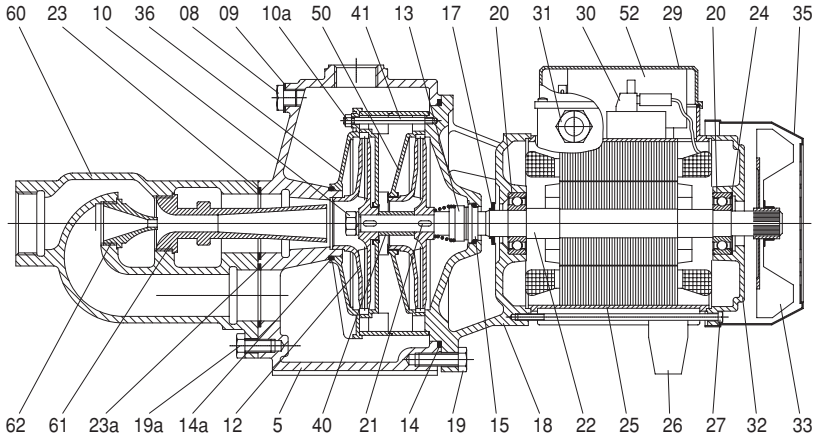

Item	Part No.	Description	Qty
36.	W54150020	Diffuser Cover	1
40.	W56900020	Spacer, Brass	1
41.	W57300502	Screw	4
50.	W54100040	Diffuser	1
52.	W55500440	Capacitor, SEC1201511	1
	W55500343	Capacitor, SEC1202031	
60.	W54130060	Ejector Body, Cast Iron, SEC1201511	1
	W54130080	Ejector Body, Cast Iron, SEC1202031	
61.	W54110120	Venturi Pipe, Plastic, SEC1201511	1
	W54110140	Venturi Pipe, Plastic, SEC1202031	
62.	W54120120	Ejector Nozzle, Plastic, SEC1201511	1
	W54120140	Ejector Nozzle, Plastic, SEC1202031	

DIMENSIONS

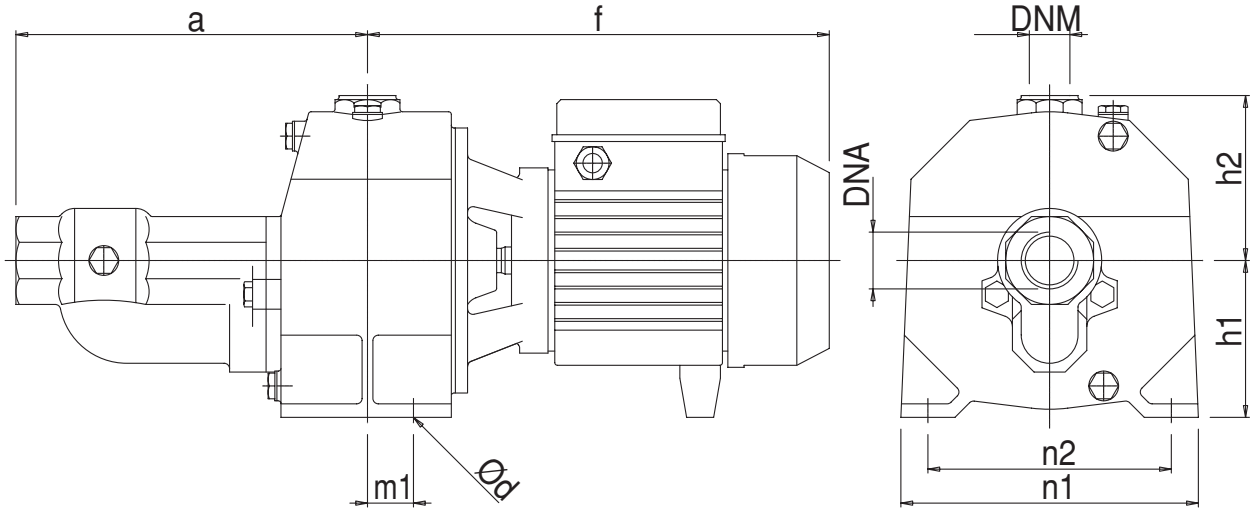

in (mm)	DNA	DNM	f	a	m1	n1	n2	h1	h2	Ød	lb(kg)
SEC1201511	1.5	1	13.4 (341)	10.2 (260)	1.3 (34)	8.7 (220)	7.1 (180)	4.5 (114)	4.8 (121)	0.4 (11)	63.9 (29)
SEC1202031	1.5	1	13.4 (341)	10.2 (260)	1.3 (34)	8.7 (220)	7.1 (180)	4.5 (114)	4.8 (121)	0.4 (11)	68.3 (31)

GENERAL PUMP 1174 NORTHLAND DRIVE • MENDOTA HEIGHTS, MN 55120
PHONE: (651)454-6500 • FAX: (651)454-4524 • e-mail: sales@gpcompanies.com • www.generalpump.com

300365 Rev. B
7-02

GENERAL PUMP