GENERAL PUMP *A member of the Interpump Group*

SBC Series

Self-priming, cast iron centrifugal water pumps with built-in ejector

FEATURES

- Heavy duty cast-iron construction
- Balanced brass impeller and plastic diffuser
- Efficient graphite and ceramic mechanical seal
- Buna-N elastomers for exceptional compatibilty
- Large NPT-F ports
- Priming port

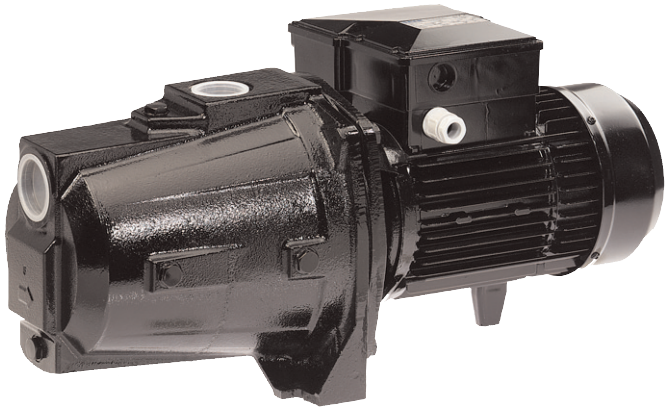

SPECIFICATIONS

Part Number	Inlet	Outlet	Impeller	Horse Power	RPM	Volts	Max psi	Max Temp °F(°C)	Mechanical Seal	Impeller Material	Body Material
SBC1200511	1"	1"	4 15/16"	1/2 HP	3450	110	115	122(50)	Graphite/Ceramic	Brass / Plastic Diffuser	Cast Iron
SBC1200711	1"	1"	4 15/16"	3/4 HP	3450	110	115	122(50)	Graphite/Ceramic	Brass / Plastic Diffuser	Cast Iron
SBC1201011	1"	1"	4 15/16"	1.0 HP	3450	110	115	122(50)	Graphite/Ceramic	Brass / Plastic Diffuser	Cast Iron

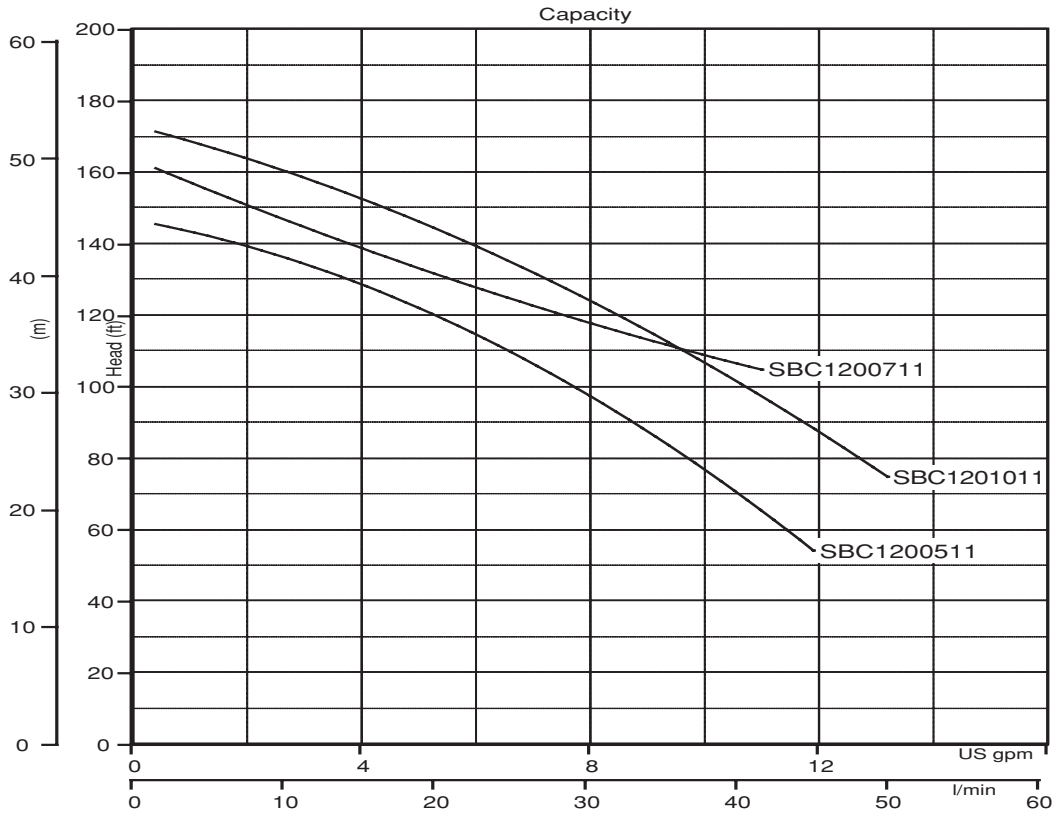

GP CENTRIFUGALS

SBC Series

GENERAL PUMP *A member of the Interpump Group*

Self-priming, cast iron centrifugal water pumps with built-in ejector

PARTS LIST

Item	Part No.	Description	Qty
5.	W51060020	Pump Body, Cast Iron	1
8.	W81100080	Plug, Brass	1
9.	W57540040	Gasket, Aluminum	1
10.	W57410801	Impeller Nut, Brass	1
12.	W51300043	Impeller, Plastic, SBC1200511	1
	W51300063	Impeller, Plastic, SBC1200711	
	W51300083	Impeller, Plastic, SBC1201011	
13.	W54250080	Rotating Mechanical Seal, Graphite	1
14.	W54730540	O-Ring	1
15.	W54200080	Fixed Mechanical Seal, Ceramic	1
17.	W54300060	Deflector	1
18.	W53200040	Flange, Cast Iron	1
19.	W57002061	Screw	4
20.	W53400100	Bearing	2
22.	W50100600	Pump & Motor Shaft, SBC1200511	1
	W50100700	Pump & Motor Shaft, SBC1200711	
	W50100800	Pump & Motor Shaft, SBC1201011	
24.	W56800060	Circlip	1
25.	W50000315	Motor Casing w/ Stator, SBC1200511	1
	W50000519	Motor Casing w/ Stator, SBC1200411	
	W50000963	Motor Casing w/ Stator, SBC1201011	
27.	W57100321	Screw	6
29.	W55120050	Terminal Board Cover	1
30.	W55100305	Terminal Board	1
	W55100020	Terminal Board, SBC1201011	
31.	W55170200	Strain Relief	1
32.	W53220040	Rear Motor Cover	1
33.	W55000060	Motor Fan, Plastic	1
35.	W55050065	Fan Cover	1
50.	W54100022	Diffuser, Plastic	1
51.	W54111000	Complete Ejector, Plastic	1
52.	W55500323	Capacitor, SBC1200511	1
	W55500343	Capacitor, SBC1200711	
	W55500384	Capacitor, SBC1201011	

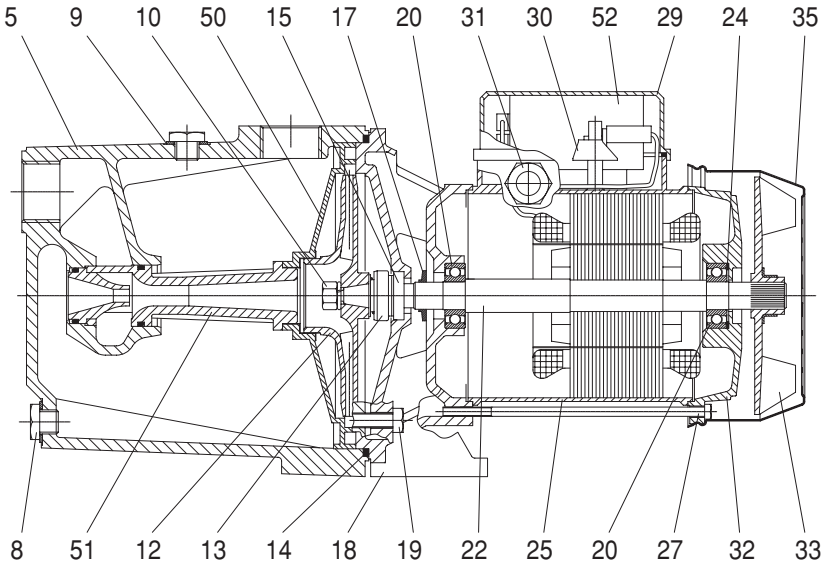

DIMENSIONS

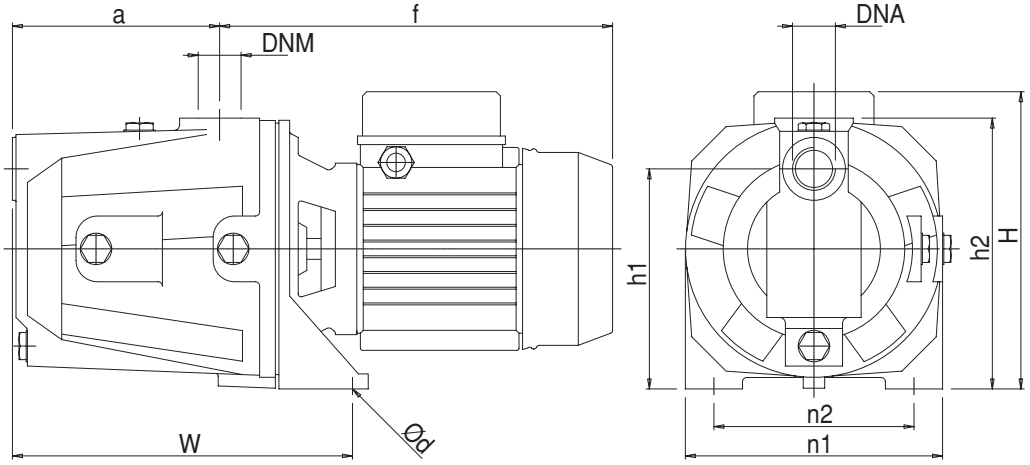

in (mm)	DNA	DNM	f	a	n1	n2	H	h1	h2	w	Ød	lb(kg)
SBC1200511	1	1	10.9 (277)	5.7 (144)	7.1 (180)	5.5 (140)	8.1 (207)	6.1 (154)	7.4 (188)	9.4 (240)	0.4 (9)	34.2 (16)
SBC1200711	1	1	10.9 (277)	5.7 (144)	7.1 (180)	5.5 (140)	8.1 (207)	6.1 (154)	7.4 (188)	9.4 (240)	0.4 (9)	35.3 (16)
SBC1201011	1	1	10.9 (277)	5.7 (144)	7.1 (180)	5.5 (140)	8.1 (207)	6.1 (154)	7.4 (188)	9.4 (240)	0.4 (9)	38.6 (18)

GENERAL PUMP 1174 NORTHLAND DRIVE • MENDOTA HEIGHTS, MN 55120

PHONE: (651)454-6500 • FAX: (651)454-4524 • e-mail: sales@gpcompanies.com • www.generalpump.com

300363 Rev. B
7-02

GENERAL PUMP