

# S20F-P

MECCALTE spa - Via Roma, 20 - 36051 CREAZZO (VI) ITALY
Tel. +39 0444/396111 - Fax +39 0444/396166 - e-mail: info@meccalte.it
website: www.meccalte.com

## 2 POLE
**1 PHASE**
**IP 23**

## CHARACTERISTICS

## 50 Hz

| Type | 115/230V 50Hz 3000 RPM | | | | | | | | | |
|---|---|---|---|---|---|---|---|---|---|---|
| | kVA | η 2/4 1 p.f. | η 3/4 1 p.f. | η 4/4 1 p.f. | T.H.D. | Air volume | Noise | | Weight | J |
| | CL. H | % | % | % | % | m³/min | 7m dBA | 1m dBA | Kg | Kgm² |
| **S20FS-130** | 8,5 | 76,5 | 79,2 | 79 | < 4 | 4,5 | 63 | 81 | 41,7 | 0,0219 |
| **S20FS-160** | 10 | 76,7 | 79,4 | 79,2 | < 4 | 4,7 | 63 | 81 | 48,7 | 0,0261 |
| **S20F-200** | 12 | 77,5 | 80,4 | 80,3 | < 4 | 4,7 | 63 | 81 | 56,5 | 0,0306 |
| **S20F-230** | 13 | 79,2 | 82,3 | 82,1 | < 4 | 4,6 | 63 | 81 | 60 | 0,0335 |

## 60 Hz

| Type | 120/240V 60Hz 3600 RPM | | | | | | | | | |
|---|---|---|---|---|---|---|---|---|---|---|
| | kVA | η 2/4 1 p.f. | η 3/4 1 p.f. | η 4/4 1 p.f. | T.H.D. | Air volume | Noise | | Weight | J |
| | CL. H | % | % | % | % | m³/min | 7m dBA | 1m dBA | Kg | Kgm² |
| **S20FS-130** | 10,5 | 76,5 | 79,6 | 79,4 | < 4 | 5,4 | 65 | 83 | 41,7 | 0,0219 |
| **S20FS-160** | 12 | 76,7 | 79,8 | 79,6 | < 4 | 5,7 | 65 | 83 | 48,7 | 0,0261 |
| **S20F-200** | 14,4 | 77,8 | 80,9 | 80,8 | < 4 | 5,7 | 65 | 83 | 56,5 | 0,0306 |
| **S20F-230** | 15,5 | 79,7 | 82,8 | 82,7 | < 4 | 5,6 | 65 | 83 | 60 | 0,0335 |

| Type | 3000 RPM 115-230V 50 Hz | | | | 3600 RPM 120-240V 60 Hz | | | | Capacitor test absorption | | |
|---|---|---|---|---|---|---|---|---|---|---|---|
| | kVA | Stator Ω | Rotor Ω | Exciting Ω | kVA | Stator Ω | Rotor Ω | Exciting Ω | µF | I ac 230V | I ac 240V |
| **S20FS-130** | 8,5 | 0,205 | 5,75 | 1,56 | 10,5 | 0,150 | 5,75 | 1,25 | 25 | 1,8 | 2,3 |
| **S20FS-160** | 10 | 0,175 | 6,6 | 0,82 | 12 | 0,124 | 6,6 | 0,6 | 31,5 | 2,3 | 2,8 |
| **S20F-200** | 12 | 0,133 | 7,54 | 0,65 | 14,4 | 0,077 | 7,54 | 0,44 | 35 | 2,5 | 3,2 |
| **S20F-230** | 13 | 0,079 | 8,1 | 0,64 | 15,5 | 0,056 | 8,0 | 0,41 | 40,0 | 2,9 | 3,6 |

Member of CISQ Federation
CERTIFIED MANAGEMENT SYSTEM
ISO 9001 - ISO 14001
ISO 45001
INSULATION SYSTEM

# OVERALL SIZE, STANDARD TYPE

FORM B9/25.4

dimensions in mm.

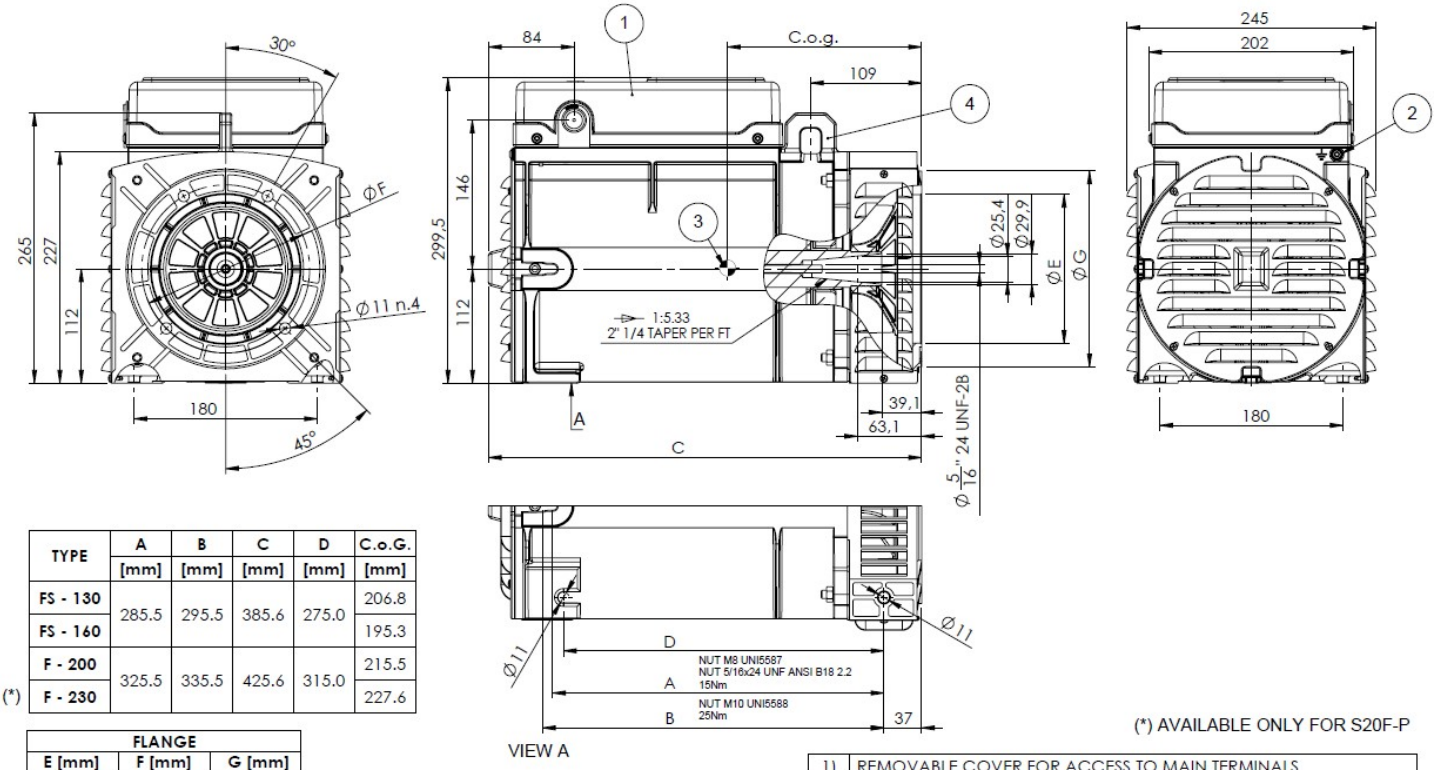


| TYPE | A [mm] | B [mm] | C [mm] | D [mm] | C.o.G. [mm] |
|---|---|---|---|---|---|
| FS - 130 | 285.5 | 295.5 | 385.6 | 275.0 | 206.8 |
| FS - 160 | | | | | 195.3 |
| F - 200 | 325.5 | 335.5 | 425.6 | 315.0 | 215.5 |
| (*) F - 230 | | | | | 227.6 |

| FLANGE | | |
|---|---|---|
| E [mm] | F [mm] | G [mm] |
| 146.0 | 165.00 | 192.0 |
| 163.6 | 196.85 | 216.0 |
| 177.7 | | |

(*) AVAILABLE ONLY FOR S20F-P

| | |
|---|---|
| 1) | REMOVABLE COVER FOR ACCESS TO MAIN TERMINALS |
| 2) | SCREW FOR GROUNDING |
| 3) | CENTER OF GRAVITY (C.o.g.) IN CONF. S20F AND FLANGE Ø146mm |
| 4) | LIFTING EYE - AVAILABLE ONLY FOR TYPE "F" |

FORM B9/C30

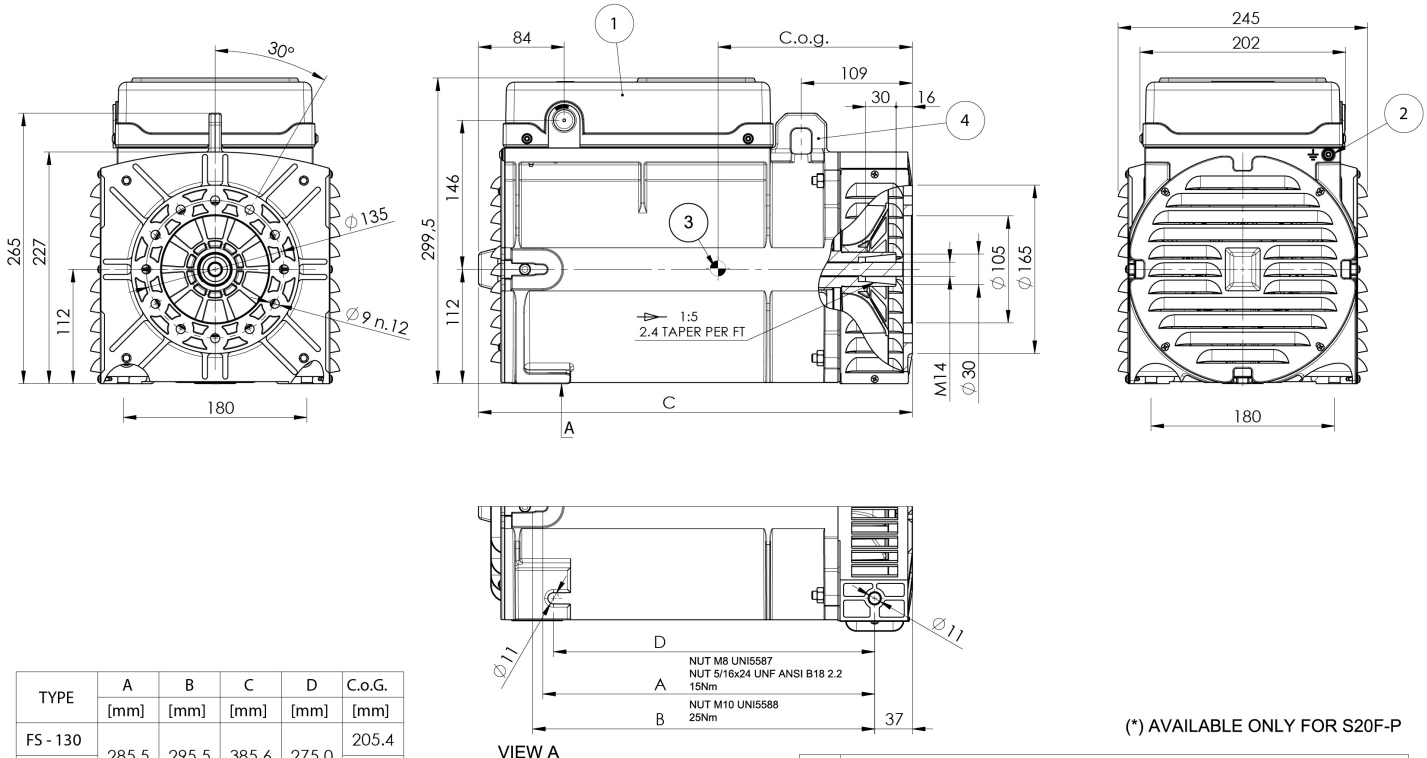


| TYPE | A [mm] | B [mm] | C [mm] | D [mm] | C.o.G. [mm] |
|---|---|---|---|---|---|
| FS - 130 | 285.5 | 295.5 | 385.6 | 275.0 | 205.4 |
| FS - 160 | | | | | 194.5 |
| F - 200 | 325.5 | 335.5 | 425.6 | 315.0 | 214.5 |
| (*) F - 230 | | | | | 226.5 |

(*) AVAILABLE ONLY FOR S20F-P

| | |
|---|---|
| 1) | REMOVABLE COVER FOR ACCESS TO MAIN TERMINALS |
| 2) | SCREW FOR GROUNDING |
| 3) | CENTER OF GRAVITY (C.o.g.) IN CONF. S20F |
| 4) | LIFTING EYE - AVAILABLE ONLY FOR TYPE "F" |

# OVERALL SIZE, STANDARD TYPE

## FORM MD35

dimensions in mm.

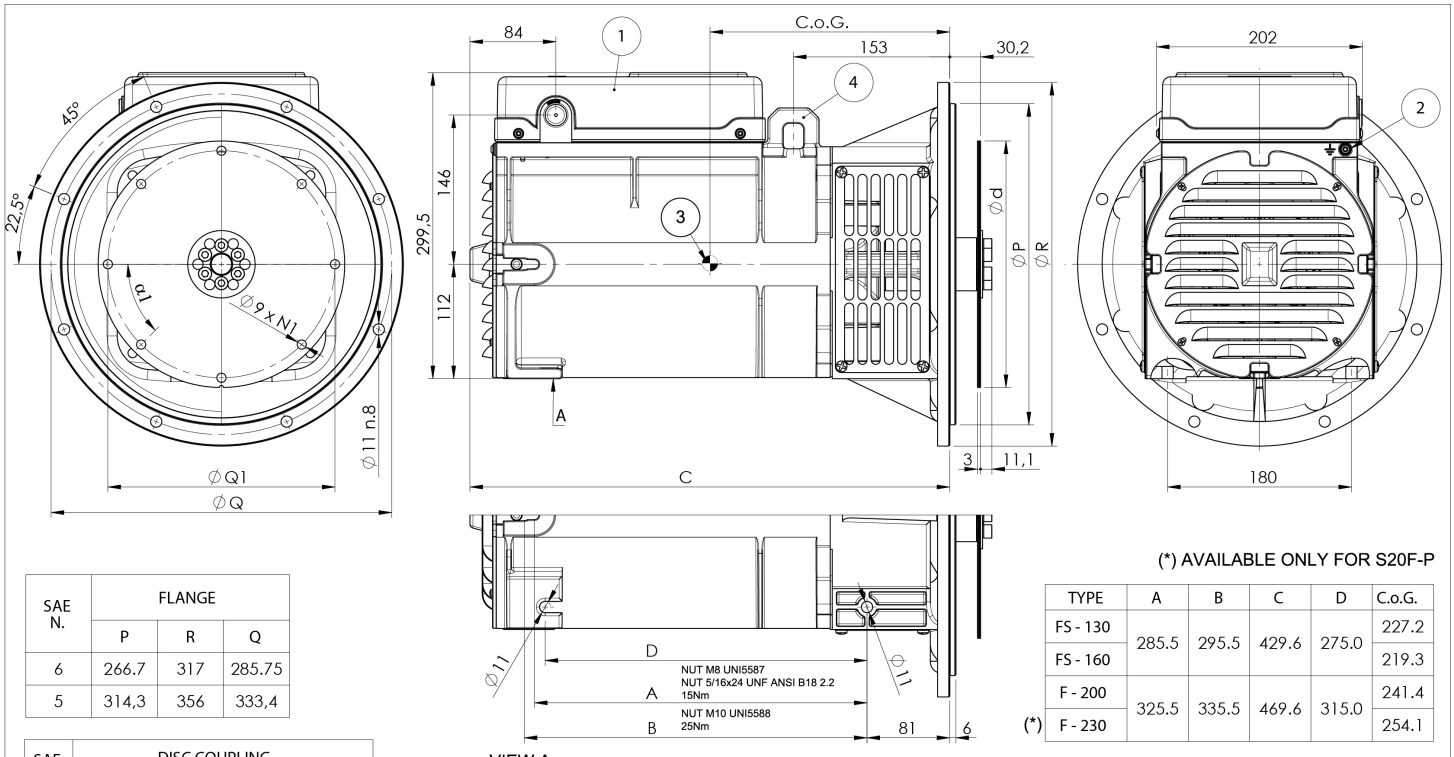


VIEW A

| SAE N. | FLANGE | | |
|---|---|---|---|
| | P | R | Q |
| 6 | 266.7 | 317 | 285.75 |
| 5 | 314,3 | 356 | 333,4 |

| SAE N. | DISC COUPLING | | | | |
|---|---|---|---|---|---|
| | d | L | Q1 | N1 | α1 |
| 6 1/2 | 215,90 | 30,2 | 200,00 | 6 | 60° |
| 7 1/2 | 241,30 | 30,2 | 222,25 | 8 | 45° |

(*) AVAILABLE ONLY FOR S20F-P

| TYPE | A | B | C | D | C.o.G. |
|---|---|---|---|---|---|
| FS - 130 | 285.5 | 295.5 | 429.6 | 275.0 | 227.2 |
| FS - 160 | | | | | 219.3 |
| F - 200 | 325.5 | 335.5 | 469.6 | 315.0 | 241.4 |
| (*) F - 230 | | | | | 254.1 |

| | |
|---|---|
| 1) | REMOVABLE COVER FOR ACCESS TO MAIN TERMINALS |
| 2) | SCREW FOR GROUNDING |
| 3) | CENTER OF GRAVITY (C.o.g.) IN CONF. S20F MD35/5 F.6.5 |
| 4) | LIFTING EYE - AVAILABLE ONLY FOR TYPE "F" |

## FORM B34

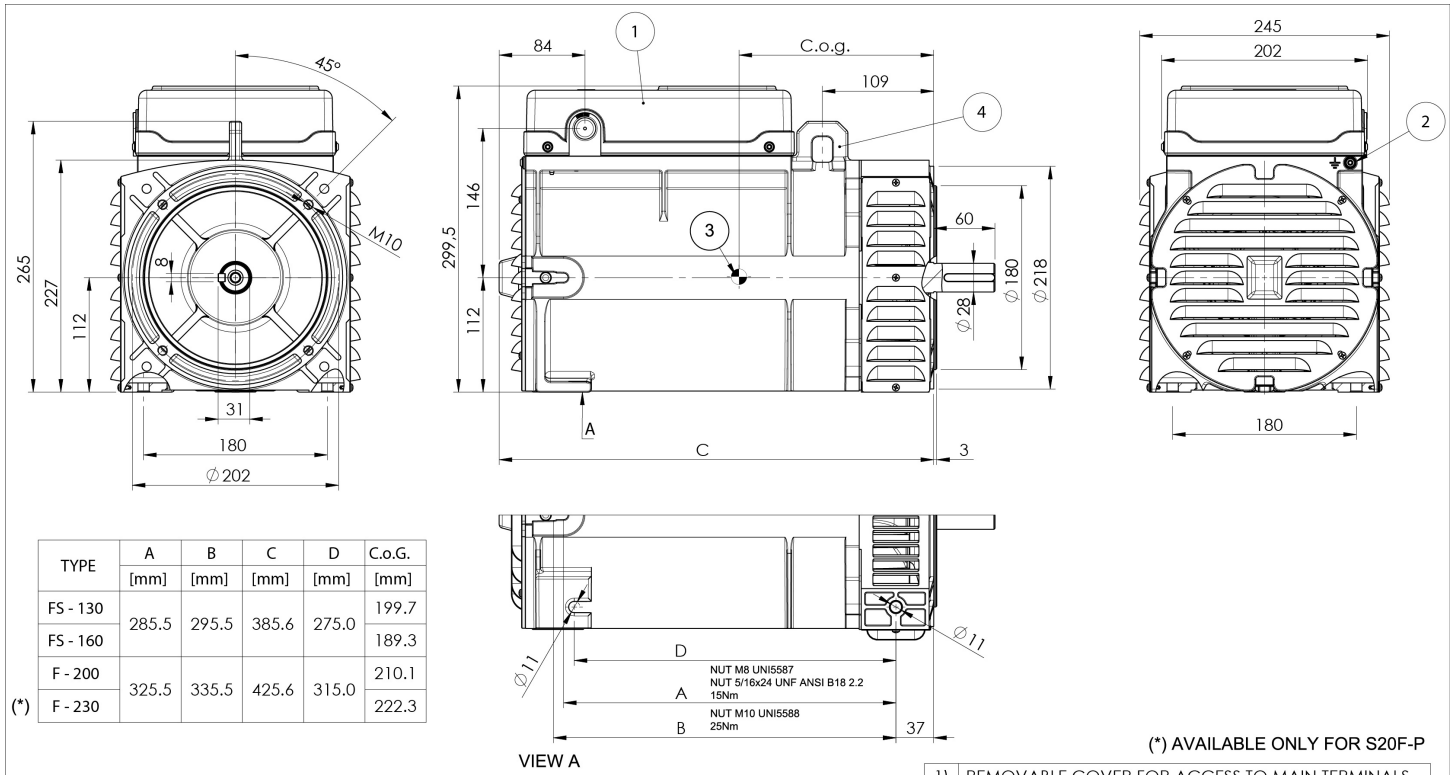


VIEW A

| TYPE | A [mm] | B [mm] | C [mm] | D [mm] | C.o.G. [mm] |
|---|---|---|---|---|---|
| FS - 130 | 285.5 | 295.5 | 385.6 | 275.0 | 199.7 |
| FS - 160 | | | | | 189.3 |
| F - 200 | 325.5 | 335.5 | 425.6 | 315.0 | 210.1 |
| (*) F - 230 | | | | | 222.3 |

(*) AVAILABLE ONLY FOR S20F-P

| | |
|---|---|
| 1) | REMOVABLE COVER FOR ACCESS TO MAIN TERMINALS |
| 2) | SCREW FOR GROUNDING |
| 3) | CENTER OF GRAVITY (C.o.g.) IN CONF. S20F |
| 4) | LIFTING EYE - AVAILABLE ONLY FOR TYPE "F" |