ENGLISH VERSION

WARNING!

Read this Operator's Manual carefully before using this machine. Failure to understand and follow the contents of this manual may result in electrical shock, fire and/or serious personal injury.

READ CAREFULLY

JETWAVE®

HIGH PRESSURE CLEANERS

RAPTOR™

HIGH PRESSURE WATER CLEANER

Cold Water Petrol Driven

Record Serial Number below and retain product serial number which is located on nameplate.	
UNIT SERIAL NO.	
ENGINE SERIAL NO.	
PURCHASE DATE	

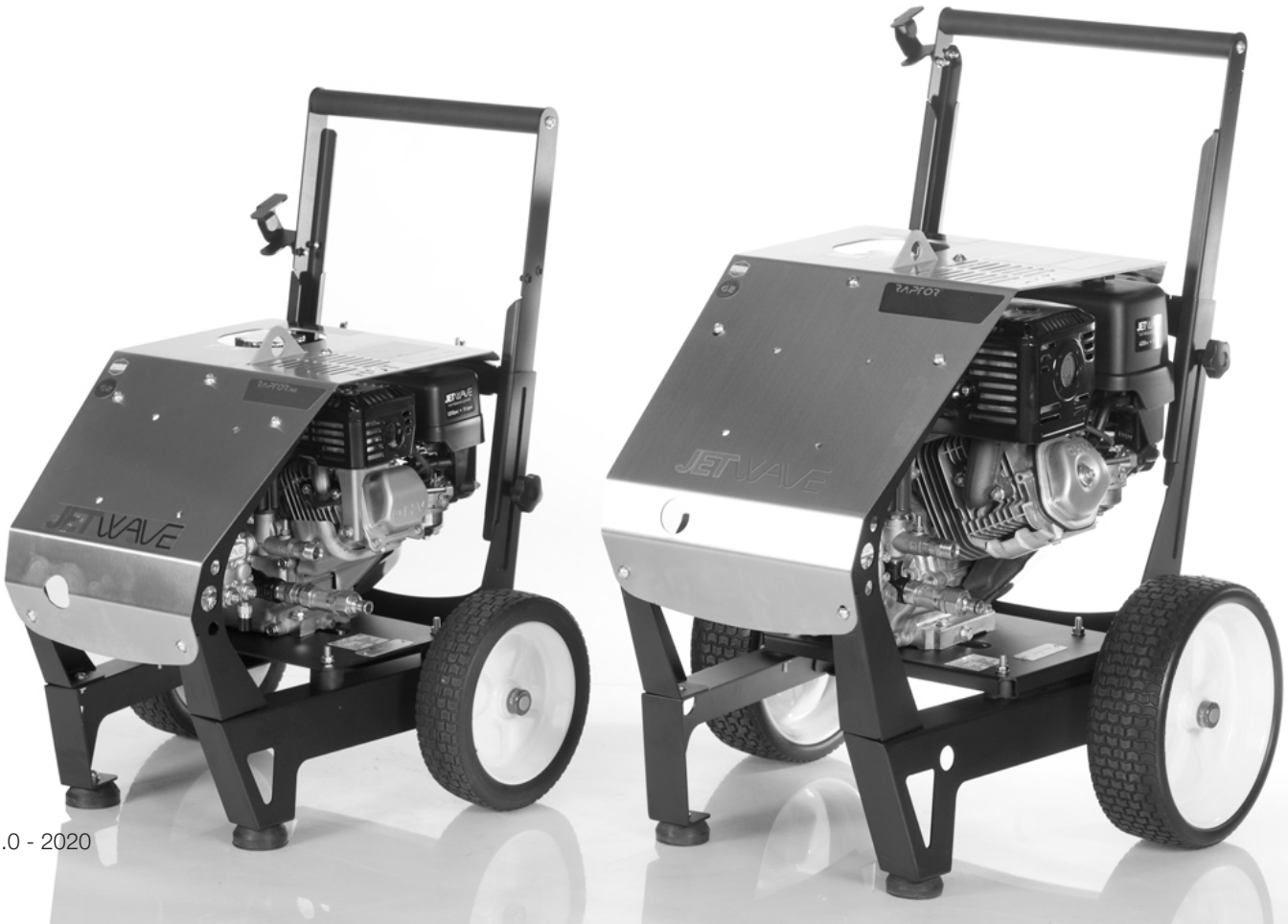

V1.0 - 2020

Table of Contents

Safety Symbols

General Power Tool Safety Warnings

Work Area Safety
Electrical Safety
Personal Safety
Tool Use And Care
Service
High Pressure Cleaning Safety

Description, Specifications And Standard Equipment

Description
Specifications
Standard Equipment

Machine Assembly & Operation

Engine Oil
Pump Oil
Wheels
Pre-Operation Inspection
Machine and Work Area Set-Up
Water Supply
Operating Instructions
Transportation and Storage

Maintenance Instructions

Cleaning
Engine
Battery
Pump Lubrication/Maintenance
Preparing Pump for Cold Weather Storage
Optional Equipment
Machine Storage
Service And Repair
Disposal
Troubleshooting
Maintenance Log

*Original Instructions - English

Safety Symbols
In this operator's manual and on the product, safety symbols and signal words are used to communicate important safety information. This section is provided to improve understanding of these signal words and symbols.



This is the safety alert symbol. It is used to alert you to potential personal injury hazards. Obey all safety messages that follow this symbol to avoid possible injury or death.

⚠ DANGER indicates a hazardous situation which, if not avoided, will result in death or serious injury.
⚠ WARNING indicates a hazardous situation which, if not avoided, could result in death or serious injury.
⚠ CAUTION indicates a hazardous situation which, if not avoided, could result in minor or moderate injury.
NOTICE indicates information that relates to the protection NOTICE of property.



This symbol means read the operator's manual carefully before using the equipment to reduce the risk of injury. The operator's manual contains important information on the safe and proper operation of the equipment.



This symbol means always wear safety glasses with side shields or goggles when handling or using this equipment to reduce the risk of eye injury.



This symbol indicates the risk of high pressure water directed at body parts, causing skin puncture and injection injuries.



This symbol indicates the risk of loud noises from the machine, causing irritation to your ears.



This symbol indicates the risk of breathing carbon monoxide and causing nausea, fainting or death.



This symbol indicates the risk of fire and explosion from gasoline or other sources causing burns and other injury.

General Safety Rules

⚠ WARNING

Read and understand all instructions. Failure to follow all instructions listed below may result in electric shock, fire, and/or serious injury.

SAVE THESE INSTRUCTIONS!

Work Area Safety

- Keep work area clean and well lit. Cluttered benches and dark areas invite accidents.
- Do not operate power tools in explosive atmospheres, such as in the presence of flammable liquids, gases, or dust. Power tools create sparks which may ignite the dust or fumes.
- Keep bystanders, children, and visitors away while operating a power tool. Distractions can cause you to lose control.

Electrical Safety

- Avoid body contact with grounded surfaces such as pipes, radiators, ranges and refrigerators. There is an increased risk of electrical shock if your body is grounded.

Personal Safety

- Stay alert, watch what you are doing and use common sense when operating a power tool. Do not use a tool while you are tired or under the influence of drugs, alcohol, or medication. A moment of inattention while operating power tools may result in serious personal injury.
- Dress properly. Do not wear loose clothing or jewelry.
- Contain long hair. Keep your hair, clothing and gloves away from moving parts. Loose clothes, jewelry, or long hair can be caught in moving parts.
- Do not overreach. Keep proper footing and balance at all times. This enables better control of the tool in unexpected situations.
- Use safety equipment. Always wear eye protection.
- Dust mask, non-skid safety shoes, hard hat, or hearing protection must be used for appropriate conditions will reduce personal injuries.

Tool use and Care

- Do not force the tool. Use the correct tool for your application. The correct tool will do the job better and safer at the rate for which it is designed.
- Do not use the power tool if the switch does not turn it ON and OFF. Any power tool that cannot be controlled with the switch is dangerous and must be repaired.
- Store idle tools out of the reach of children and other untrained persons. Tools are dangerous in the hands of untrained users.
- Maintain tools with care.

- Check for misalignment or binding of moving parts, breakage of parts and any other condition that may affect the tool's operation. If damaged, have the tool serviced before using. Many accidents are caused by poorly maintained tools.

Use only accessories that are recommended by the manufacturer for your model and pressure & flow rated accordingly. Accessories that may be suitable for one tool, may become hazardous when used on another tool.

Service

- Tool service must be performed only by qualified repair personnel. Service or maintenance performed by unqualified personnel could result in a risk of injury.
- When servicing a tool, use only genuine replacement parts. Follow instructions in the Maintenance section of this manual. Use of unauthorized parts or failure to follow Maintenance Instructions may create a risk of electrical shock or injury.

HIGH PRESSURE CLEANING SAFETY

⚠ WARNING

This section contains important safety information that is specific to this tool.

Read these precautions carefully before using this drain Cleaning Machine to re duce the risk of electrical shock or other serious injury.

SAVE ALL WARNINGS AND INSTRUCTIONS FOR FUTURE REFERENCE!

Keep this manual with machine for use by the operator.

- Never operate the unit without a pressure control mechanism Hoses can whip, causing striking injuries and spray can penetrate skin and cause serious injury.
- High pressure water can inject under skin resulting in serious injury including amputation. Do not direct spray at people or animals.
- Do not operate unit above the rated working pressure or 60°C (inlet water temperature). This increases the risk of injury, including burns, and damage to the unit.
- One person must control the high pressure cleaning process and water flow.
- Always use appropriate personal protective equipment while handling and using high pressure cleaning equipment. Appropriate personal protective equipment (PPE) includes safety glasses and gloves, and may also include equipment such as latex or rubber gloves, face shields, goggles, protective clothing, respirators, head protection, hearing protection and steel toed footwear.
- Practice good hygiene. Use hot soapy water to wash hands and other body parts exposed to drain contents after handling or using drain cleaning equipment.
- Do not eat or smoke while operating or handling high pressure cleaning equipment. This will help prevent contamination with toxic or infectious material.
- Do not spray toxic or flammable liquids. This will reduce the risk of burns, fire, explosion or other injury.
- Gasoline and its vapors are highly flammable and explosive. See engine manual for precautions to reduce the risk of burns, explosions and serious injury while handling and using gasoline.
- Engines produce carbon monoxide, a colorless, odorless poison gas. Breathing carbon monoxide can cause nausea, fainting or death. Do not start and run engine in an enclosed area, even if doors and windows are open. Only operate outside.
- Never attempt to refuel the unit whilst engine is running. Do not spill fuel on or near exhaust take extra care in the refueling process as vapors or liquid can combust due to heat.
- Hot surfaces can cause burns and fire. Keep body parts and flammable material away from hot surfaces.
- Read and understand this manual, the engine manual and the warnings and instructions for all equipment and material being used with this tool before operating. Failure to follow all warnings and instructions may result in property damage and/or serious injury.
- Follow all applicable workplace health and safety regulations and guidelines concerning the use of this equipment.
- Read and understand Australia/New Zealand standard AS/NZS4233.1:13 High Pressure Water Jetting Systems Part 1: Safe Operation & Maintenance.

If you have any question concerning this Jetwave® product:

– Contact your local Jetwave® distributor.

– Visit jetwave.com.au/find-a-dealer to find your local Jetwave contact point.



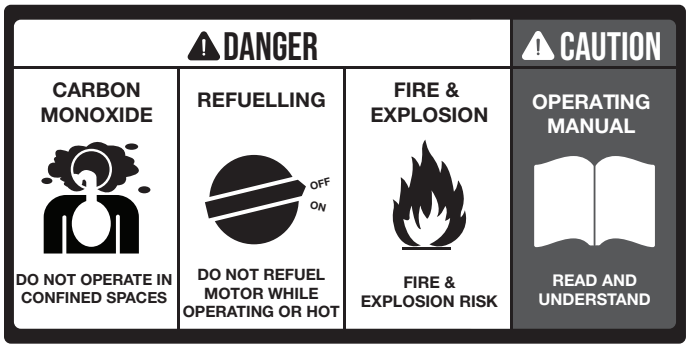

Description, Specifications and Standard equipment

Description

The Jetwave® Raptor™ Jnr & Raptor™ Engine Powered High Pressure Cleaner Machine is a portable unit designed to use a combination of water pressure and flow to clean different surfaces from dirt, grease, & grime. Water is pumped through the high pressure plunger pump at increased pressure and flow allowing water to be used at such high pressure to remove dirt and grime from surfaces. The Raptor™ High Pressure Cleaner is equipped with an gasoline Honda™ engine to drive the triplex plunger pump.



Figure.1 - Raptor JNR High Pressure Cleaner



Figure.2 - Raptor High Pressure Cleaner

Standard equipment

A Jetwave Raptor™ High Pressure Cleaner comes with:

- J500 Durotech Gun
- Lance and nozzle
- 15m of 3/8" high pressure hose wtih M22 couplings on each end
- Engine Operator's Manual
- Operator's Manual

See the Jetwave® catalog for specific equipment supplied with each catalog number.

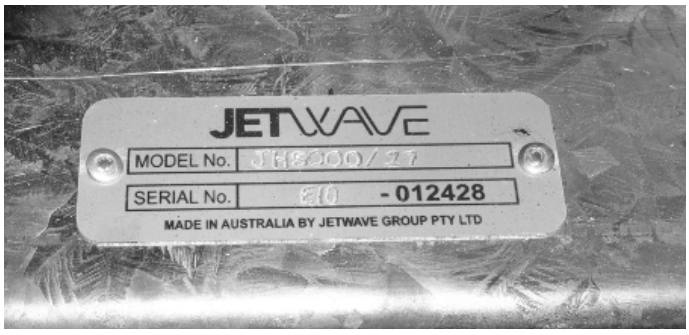

Figure.3 - Machine Serial Number

MODEL	PUMP / RPM	PRESSURE (PSI/BAR)	FLOW RATE (L/PM)	PETROL ENGINE	UNIT WEIGHT (KG)	MACHINE DIMENSIONS (mm)
Raptor Jnr	JW Triplex Plunger / 3400	3150 / 210	11	HONDA GX200	52	700(L) x 600(W) x 920(H)
Raptor	JW Triplex Plunger / 3400	4060 / 280	15	HONDA GX390	75	1110(L) x 700(W) x 860(H)

The machine serial number is located on the frame. The first 4 digits indicate the year and month of manufacture respectively.

NOTICE This machine is made to high pressure water clean. If properly used it should not damage a surfaces that is in good condition and properly designed, constructed and maintained. If the surface is in poor condition or not properly designed, constructed or maintained, the water cleaning process may not be effective or could cause damage to the surface. The best way to determine the condition of a surface before cleaning is through visual inspection.

Improper use of this pressure cleaner can damage the unit and the surface. This machine may not clear all substrate debris.

Machine Assembly

⚠ WARNING

To prevent serious injury during use and prevent machine damage, follow these procedures for proper assembly.

Engine Oil

NOTICE The unit is shipped with oil in the engine. Operating the engine with low or no oil will result in engine failure. See supplied engine operator's manual for specific information on checking oil, adding oil and oil selection.

Pump

The unit is shipped with oil in the pump.
Check oil level (ensure half way on sight-glasses) per Maintenance section.

Wheels

Typically the unit is boxed and shipped without wheels assembled. Wheels, Axle & Locking Collar are found within the box. To assemble the wheels, slide axle through axle location hole, slide wheels on each side find centerline and proceed to install locking collar each side with 4mm Allen key tool.

Pre-Operation Inspection

⚠ WARNING



Before each use, inspect your pressure cleaner and correct any problems to reduce the risk of serious injury from high pressure water and other causes and prevent unit damage.
Always wear appropriate safety equipment, when inspecting your unit.

1. Make sure that the engine switch is in the OFF position.

2. Clean any oil, grease or dirt from the equipment, including the handles and controls. This aids inspection and helps prevent the machine or control from slipping from your grip.

3. Inspect the high pressure cleaner and accessories for the following:
   - Proper assembly and completeness.
   - Broken, worn, missing, misaligned, binding or loose parts.
   - Presence and readability of the warning labels. (See Figure 4.)
   - Any other condition which may prevent the safe and normal operation.

If any problems are found, do not use the unit until the problems are corrected.



Figure.4 - Raptor Warning Labels

Clean water filter (Figure 5). Unscrew the brass nut from the filter and remove and clean the mesh filter. Dirt and debris can restrict the water flow to the pump and cause performance issues.

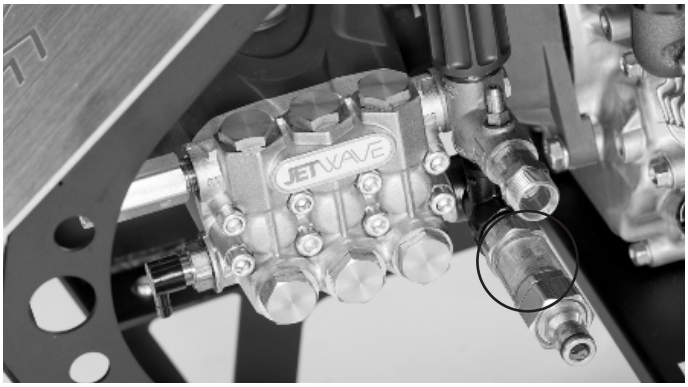

Figure.5 - Raptor Water Filter

4. Inspect the pressure cleaner nozzle orifices for any damage or blockage. Blockages can be cleaned with a nozzle cleaning tool. Use care not to enlarge nozzle orifices while cleaning. Damaged nozzles or nozzles with enlarged orifices can decrease unit performance and should be replaced.

5. Inspect the hoses, connectors and fittings for wear and damage. If there are any kinks, cracks, breaks or wear through the outer jacket of the hose or other damage, do not use the hose. Damaged hoses can burst or leak high pressure water and cause serious injury. Replacement hoses and fitting should be rated at or higher than the unit pressure rating.

6. Inspect and maintain the engine per the engine operator's manual.

7. Check engine fuel level. If needed, add unleaded gasoline. See engine operator's manual for requirements. Use caution when handling gasoline. Work in a well ventilated area. Never fill the tank while unit is running, do not overfill tank and do not spill fuel. Make sure tank cap is securely closed.

8. Check the oil level(s) in the pump through the sight glass and add oil if needed (see Maintenance Instructions section). Inspect Engine as directed in the engine operator's manual.

Machine and Work Area Set-up

⚠ WARNING



Always wear safety glasses, gloves and other appropriate protective equipment when setting up your pressure cleaner. Rubber soled, non-slip shoes can help prevent slipping on wet surfaces.

Engines produce carbon monoxide, a colorless, odorless poison gas. Breathing carbon monoxide can cause nausea, fainting or death. Do not start and run engine in an enclosed area, even if doors and windows are open. Only operate outside.

Set-up the unit and work area according to these procedures to reduce the risk of injury from high pressure water, chemical burns, infections, carbon monoxide and other causes, and prevent jetter damage.

1. Check work area for:
   - Adequate lighting.
   - Flammable liquids, vapors or dust that may ignite. If present, do not work in area until sources have been identified and corrected. The machine is not explosion proof and can cause sparks.
   - Clear, level, stable dry place for machine and operator.
   - If needed, remove the water from the work area. Wood or other coverings may need to be put down.
   - Unit location that is in a well ventilated outdoor area. Do not place the jetter indoors, even with doors and windows open. Unit can be located remotely from the point of use.
   - Suitable water supply. Clear path to transport the unit to the set up location.
2. Inspect the surface to be cleaned, and make sure no materials or elements are in the way of the unit.
3. Determine the correct equipment for the application.
4. Make sure all equipment has been properly inspected.
5. Evaluate the work area and determine if any barriers are needed to keep bystanders away. Bystanders can distract the operator. If working near traffic, erect cones, signs or other barriers to alert drivers.
6. Take the unit to the well-ventilated outdoor work area along the clear path. See Transportation Section. Be aware of possible slip hazards. Wear appropriate footwear to help prevent slips.

Water Supply

Run a hose from the water source to the unit water inlet. Use the largest diameter, shortest length hose possible. A 3/4" I.D. Inlet hose is the minimum recommended size. An appropriate backflow prevention device should be used to comply with all local codes and ordinances.

Dirt and debris in the water supply can cause excess pump wear, clog the unit filter, nozzles and reduce performance.

Do not use water from ponds, lakes or other sources that may be contaminated.

Warm water can be used for improved cleaning. Do not use water hotter than 60°C. When using warm water, use appropriate personal protective equipment to reduce the risk of burns.

When using in cold weather, use precautions to prevent water from freezing in the pump. This can damage the pump.

Hose Set-Up

Use care when routing hoses. Routing hoses over rough surfaces, sharp edges, crossing hoses, etc. can damage the hose jacket. Keeping the unit hose on the reel(s) will help to minimize hose damage.

Operating Instructions

⚠ CAUTION



Always wear eye protection to protect your eyes against dirt and other foreign objects. Always wear appropriate personal protective equipment for the work environment.

Never operate the unit without the hose attached to a spray gun. Hose can whip, causing striking injuries and spray can penetrate skin and cause serious injury.

High pressure fluid can inject under skin resulting in serious injury, including amputation. do not direct spray at people or animals. do not operate jetter above pressure rating or 60°C (inlet water temperature). This increases the risk of injury, including burns, and damage to the unit. One person must control the unit process and water flow.

Always use appropriate personal protective equipment while handling and using high pressure cleaning equipment. Appropriate personal protective equipment always includes safety glasses and gloves, and may also include equipment such as latex or rubber gloves, face shields, goggles, protective clothing, respirators, and steel toed footwear.

Follow operating instructions to reduce the risk of injury from whipping hoses, high pressure liquid injection, carbon monoxide and other causes.

1. Make sure that machine and work area is properly set up and that the work area is free of bystanders and other distractions. If the unit is located remotely from the point of use, another person should be located at the unit.
2. Attach the gun to the high pressure hose via coupling system.
3. Attach the hose to the high pressure pump/valve outlet.
4. Confirm that the water supply is attached and turned on to low pressure pump inlet. Never start the engine without the water supply turned ON. This can damage the pump.
5. Wash Wand Lock Out – the wash wand includes a lock out on the back of the trigger. Flip the lock out down to prevent the operation of the trigger when the wash wand is not in use.
6. With the wand pointed in a safe direction, squeeze the wash wand trigger to reduce pressure and allow the engine to be started. Following the starting instructions supplied in the engine manual, start the engine. Set

the throttle to the full open position. Allow the engine to warm up. Release the trigger soon after the engine starts.

7. With the wand pointed in a safe direction, squeeze the wash wand trigger. If applicable; turn the unloader valve while monitoring the pressure gauge to adjust the pressure as desired. Do not exceed the machine pressure rating. Release the wash wand trigger.
8. (If Applicable) Apply choke before starting.
9. Proceed to start engine (note may need to hold trigger gun open during pull start).
10. Open the water control valve (high pressure gun). Following the starting instructions supplied in the engine operator manual, start the engine. Set the throttle to the full open position (If Applicable). Confirm that water flows freely through the nozzle. Close the trigger on the high pressure gun. When the water control valve is closed and the unit is running, the unloader valve will recirculate water back to the pump head or tank (If Applicable). Allow the engine to warm up.
11. If needed, turn the unloader valve while monitoring the pressure gauge on the unloader valve to adjust the pressure as desired (If Applicable) (clockwise to increase pressure, counter-clockwise to decrease pressure). Do not exceed the machine pressure rating. Do not force the unloader valve or use wrenches or tools to turn. This will damage the unloader valve.

If the unit will not generate the rated pressure or is erratic

- Ensure that all in one vario nozzle head is clipped into high pressure position.
- Make sure the engine throttle is properly adjusted to the full open position.
- Turn unloader valve clockwise to increase pressure. Do not force.
- Inspect system for leaks. Use caution during inspection to prevent injury. If leaks are found, shut unit OFF before fixing.
- Turn the unit OFF. Check the inlet hose and filter and make sure that they clear of debris.
- Make sure there is adequate water flow to the unit.
- Turn the unit OFF. Remove the nozzle and clean the orifices with the nozzle cleaning tool.
- Ensure correct nozzle orifice size is used and no signs of excessive wear are evident.
- Activate trigger and run the unit to remove air or debris from the system. Turn the unit OFF before removing or attaching the lance/nozzle.

6. Assume a proper operating position.

- Be sure you can control the ON/OFF action of a water control valve. Do not turn the valve ON yet. In case of emergency you must be able to turn off water flow.
- Be sure that you have good balance and do not have to overreach.
- You must be able to place one hand on the gun at all times to control and support the lance.

This operating position will help to maintain control of the gun and lance.

Pressure Washer operation

1. When using as a pressure washer use both hands to grip and direct the wash wand for greater control. Never direct the wash wand at people. High pressure fluid can inject under skin resulting in serious injury. Never direct wash wand at electrical equipment or wiring to reduce the risk of electrical shock.
2. Control the flow of water with the trigger. Use care when using the pressure washer. Holding the nozzle too close to a surface can damage it. Test a small, inconspicuous area to confirm the settings work as desired.
3. Do not allow the jetter to run for extended period of time with the trigger OFF. When the trigger is OFF, water recirculates and it causes the water to heat up.
4. Once pressure washing is complete, release the trigger and turn OFF the engine as directed in the engine manual. Squeeze the trigger and ensure all water control valves are also in open position to release system pressure. Never leave the system pressurized.

Machine Shut Down Procedure

1. When high pressure cleaning task is complete, release high pressure trigger.
2. Return to the unit controls.
3. Idle down unit RPMs via throttle control (if applicable)
4. Proceed to power down the engine via kill switch or key switch (if applicable). Refer to engine operator manual.
5. Turn water supply OFF.
6. Release system back pressure by pressing the trigger on the spray gun (if applicable).
7. Disconnect high and low pressure hoses and coil the assembly for safety and proper storage.

Transportation and Storage

1. Turn OFF the fuel valve.
2. Drain water from unit as needed.
3. Coil hoses and secure equipment appropriately. All loose material must be removed. Transport remote reel separate from unit.
4. Unit is equipped with wheels to allow transport over smooth level surfaces.
5. Unit weighs from 50-80kg (approx.) Use appropriate equipment and methods to load and transport.

Maintenance Instructions

⚠ WARNING

Before performing any maintenance, engine switch battery isolation switch should be in OFF position and spark plug wires should be disconnected to prevent inadvertent operation. Open water control valve to release any fluid pressure in system.

Always wear safety glasses and gloves when performing any maintenance to help protect against drain chemicals and bacteria.

Cleaning

The hose should be cleaned as needed with hot, soapy water and/or disinfectants. Do not allow water to enter the engine or electrical system. Do not clean with pressure washer. Wipe the unit down with a damp cloth.

Engine

Maintain the engine as directed in the engine operator's manual supplied with the unit.

Battery

To change battery (if applicable)

1. Unclip strap (if applicable) holding battery box top on, remove top.
2. Disconnect ground (-) cable connection first, followed by positive (+) cable connection.
3. Remove battery.
4. Reverse procedure to install.

Replacement batteries should have the following specifications:

- BCI Group/Type: U1
- Size (L x W x H): 196 x 128 x 159 (mm)
- Voltage: 12
- Cold Cranking Amps (CCA): 350
- Reserve Capacity (RC): 45
- Terminal Type: Offset Lug Terminal (OLT)
- Assembly Type: C
- Max Charging Volt: 14.8

Pump Lubrication/Maintenance

Check the pump oil level prior to each use. Place the unit on a level surface. Wipe any dirt and debris from the area of the dipstick and sight-glass. Oil level should be at the middle of the sight-glass (Figure 16). If needed, remove the dipstick and add SAE 15W-40 Mineral non-detergent oil, fill to half-way on the sight-glass. Do not overfill, reinstall dipstick.

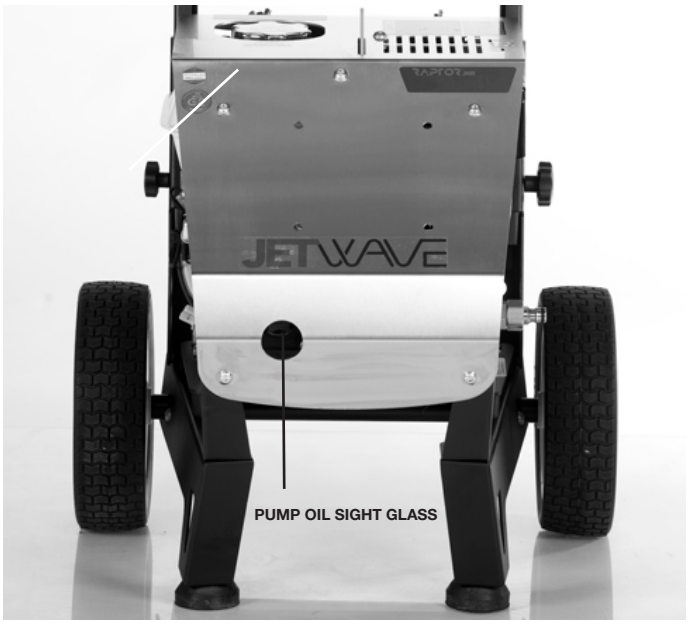

Figure.16 - Checking Pump Oil Level

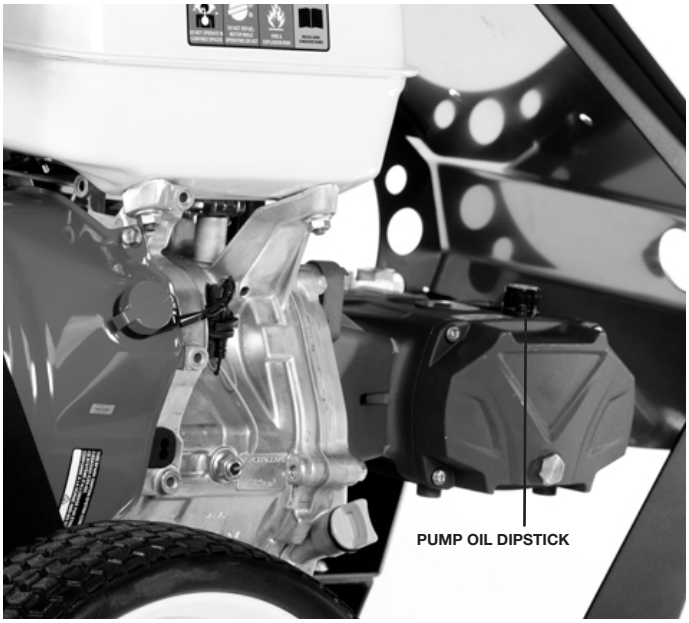

Figure.16A - Checking Pump Oil Level

Change oil in pump after first 50 hours of operation and every 500 hours of operation after that. With the pump warm from operation, remove plug on bottom of pump and drain oil into suitable container. Replace plug. Fill to approximately half-way on the sight-glass with SAE 15W-40 Mineral non-detergent oil using the checking procedure.

At 1000 hours of use (less in severe use conditions) the unit should be taken to a Jetwave Independent Service Center for pump seal and valve service.

Preparing Pump for Cold Weather Storage

If the unit will be stored under conditions where the temperature is near or below 0°C, the unit must be properly prepared. If water freezes in the pump, it can damage it.

After the tank is drained (if applicable), remove the hose from the water inlet filter. Open all valves in the system and use compressed air to force any water out of the system. This can also be used to remove water from the hoses.

Machine Storage

Store the unit in a well ventilated area protected from the weather elements. Keep the machine in a locked area that is out of reach of children and people unfamiliar with High Pressure Cleaners. This machine can cause serious injury in the hands of untrained users. See Maintenance section for information on cold weather storage. See engine operator's manual for specific information on engine storage.

Service And Repair

⚠ WARNING

Improper service or repair can make machine unsafe to operate.

The "Maintenance Instructions" will take care of most of the service needs of this machine. Any problems not addressed by this section should only be handled by an authorized Jetwave service technician.

Unit should be taken to a Jetwave Independent Service Center or returned to the factory.

For information on your nearest Jetwave Independent Service Center or any service or repair questions:

- Contact your local Jetwave distributor.
- Visit jetwavegroup.com.au/find-a-dealer/ to find your local Jetwave contact point.
- Contact Jetwave Technical Service Department at service@jetwave.com.au or call (08) 8371 3599

Disposal

Parts of the unit contain valuable materials and can be recycled. There are companies that specialize in recycling that may be found locally. Dispose of the components in compliance with all applicable regulations. Contact your local waste management authority for more information.

Trouble Shooting

FAULT	CAUSE	SOLUTION
Pump runs normally but pressure does not achieve rated value.	Pump is sucking air. Valves are worn or dirty. Unloader valve packing worn. Nozzle incorrect or worn. Worn piston packing. Dirty inlet filter.	Check that all hoses and fittings are airtight. Check, clean or replace. Check and replace. Check and replace. Check and replace. Check and clean.
Fluctuating pressure.	Valves dirty, worn or stuck. Pump sucking air. Worn piston packing. Dirty filter.	Check, clean or replace. Check that all hoses and fittings are airtight. Check and replace. Check and clean.
Presence of water in oil.	High humidity in air. Piston packing or oil seal worn. Water entering through breather.	Check and change oil twice as often. Check and replace.
Water dripping from pump.	Piston packing worn. Piston guide o-rings worn.	Check and replace. Check and replace.
Dripping oil.	Worn oil seals. Oil coming out of breather.	Check and replace. Pump oil level overfull.
Motor does not start when switched on	Plug not well connected or unreliable power supply. Earth leakage overload.	Check plug, cable and switch. Check earth leakage.

Maintenance Log

Hour Meter Reading	Date	Maintenance Performed	Service Agent

Notes



72–74 Richmond Road, Keswick, 5035
Adelaide, South Australia, AU
+61 8 8371 3599
sales@jetwave.com.au
jetwave.com.au

jetwavegroup jetwave.group jetwavegroup jetwavegroup jetwave-group