OPERATION AND MAINTENANCE MANUAL

Automatic Hosereel With Spring



RAMEX SRL
Via Salvo d'Acquisto 4/a
42020 Albinea (RE) Italy
Tel +39-0522-347266 Fax +39-0522-347228
www.ramex.it ramex@ramex.it

VER.1.2

Ramex thank you for the purchase of a product in its range and invites you to read this manual contains all the information necessary for a proper use of equipment.
The user is required to read the same before use and use in accordance with the instructions contained therein.
The owner's manual and maintenance must be kept available for its proper preservation.
Ramex S.r.l. reserves the right to make changes or modifications to this manual and maintenance without prior notice to customers.

DECLARATION OF CONFORMITY

RAMEX S.r.l.
via Salvo d'Acquisto 4/a
42020 Albinea (RE) - Italy

The undersigned Ruozi Franco as the legal representative of the company RAMEX S.r.l.

STATES

under sole responsibility

that the product automatic hosereel with spring models:

AV1000 - AV1100 – AV 1120- AV 1121- AV1200 - AV1300 – AV 3500- AV 3501 – AV 3502 – AV 6000- AV 6001- AV 6002- AV 6003 – AV 6300- AV 6301- AV 815- AV 820 – AV 816 – AV 825 – AV 813 – AV 817 – AV 1500 – AV 2000 – AV 2200 – AV 2201 - AV2300- AV 3000- AV 4000- AV 4500 – AV 5000- AV 800- AVC 3015 – AVC 3020- AVC 3016 – AVC 3022- AVC 1060- AVC 1070- AVC 1014- AVC1514- AVC1038 – AVC HP – AV 6002 – AV 6000SP – AV 2070 – AV 2080 – AV FOOD 1 – AV FOOD 2 – AV 2050 – AV 100.

TYPE:
MODEL:
SERIES/SERIAL NUMBER :
YEAR :

- comply with the requirements of the directive:
  2006/42/CE

- and also meet the following standards:

UNI EN ISO 14121-1:2007 Safety of machinery - Risk assessment Part 1;
UNI EN ISO / TR 14121-2:2010 Safety of machinery - Risk assessment Part 2;
UNI EN ISO 12100-1:2009 Safety of machinery Part 1;
UNI EN ISO 12100-2:2009 Safety of machinery Part 2;

RAMEX Srl Legal Representative
Albinea (RE) Italy 1 January 2010

Warranty

The duration of the warranty period is of 12 months from date of purchase. The warranty claim extends only to replacement of defective parts. The warranty does not cover misuse of the product. Any tampering or modification of the product will void any warranty claim by the customer.

Symbols

The following table shows a brief legend indicating the symbols used (the symbols shown are those most frequently used throughout this booklet and the remaining symbols are still easy to understand).



DANGER: calls attention to situations or problems that may affect the safety of persons or injury or death.



RESTRICTIONS: Do not run the steps in what will affect the efficiency / security of the system.



IMPORTANT: Draws attention to important information of a general nature which do not affect either the personal safety, nor the proper functioning of the system.



CORRECT USE: indicates that the mode of implementation of operations is correct.



INCORRECT OPERATION: Indicates the execution mode of operations is not correct.

Table of Contents

1. Introduction
1.1. Description page. 04
1.2. Hazards and safety stickers page. 04
1.3. Improper use page. 05
2. Technical characteristics. 06
2.1. Dimensions and weights links page. 06
2.2. Noise page. 07
3. Delivery, shipping and installation page. 07
3.1. Delivery page. 07
3.2. Transport P.. 07
3.3. Installation page. 07
3.3.1. Install hose reel page. 08
4. Safety information page. 08
4.1. Work Environment page. 08
4.2. Preliminary checks page. 08
4.3. Using P.. 09
4.4. Personal protective equipment page. 09
4.5. Maintenance page. 09
5. Standards of Service page. 09
5.1. Preliminary checks page. 09
5.2. Using automatic hose reel with spring p.. 10
5.3. Use hose reel manual page. 10
5.4. Fine work p.. 10
6. Maintenance page. 10
6.1. Routine Maintenance page. 11
6.1.1. Replacement pipe and performing a tensioning spring page. 11
6.2. Demolition and Disposal page. 11
7. Truck Parts page. 12
8. Disadvantages, causes and remedies page. 12
9. Accessories page. 12

1.1 **Description.**

This manual describes how to use and maintenance for different types of automatic hosereel.

Table 1: Types of use of automatic hosereel:

Product code						Application
AV 1000	AV 1100	AV 1120	AV 1121	AV 1200	AV 1300	Water and Air
AV 3500	AV 3501	AV 3502	AV 6000	AV 6001	AV 6003	
AV 815	AV 820	AV 816	AV 825	AV 813	AV 817	
AV 1500	AV 2000	AV 2200	AV 2201	AV 2300	AV 3000	
AV 4000	AV 4500	AV 5000	AV 800	AVC 3015	AVC 3020	
AVC 3016	AVC 3022	AVC 1060	AVC 1070	AVC 1014	AVC 1514	
AVC 1038	AVC HP	AV 6002	AV 6000 SP	AV2070	AV 2080	
AV 100	AV 6300	AV 6301				
AV 2050						Air
AV 1000 FE	AV 1100 FE	AV 1200 FE	AV 1300 FE	AVC 3015 FE	AVC 3020 FE	Industrial Oil and grease
AV 3500 FE	AV 3501 FE	AV 3502 FE	AV 6000 FE	AV 6001 FE	AV 6003 FE	
AV 815 FE	AV 820 FE	AV 816 FE	AV 825 FE	AV 813 FE	AV 817 FE	
AV 1500 FE	AV 2000 FE	AV 2200 FE	AV 2201 FE	AV 2300 FE	AV 3000 FE	
AV 4000 FE	AV 4500 FE	AV 5000 FE	AVC 3016 FE	AVC 3022 FE		
AV FOOD 1	AV FOOD 2					Liquid food

- ✓ The products for which the code in the catalog does not contain any extension are made of stainless steel AISI 303/304
- ✓ The products for which the code in the catalog shows the final extension 316 are made of stainless steel AISI 316;
- ✓ The products for which the code in the catalog shows the final extension FE are made of powder coated steel;
- ✓ The products for which the code in the catalog shows the CA final extension are made of steel and treated in electrophoresis;

All main springs inside hosereel are made of steel.

Synoptic hosereel.

- ✓ **Grey box: open hosereel**
- ✓ **Yellow box : closed hosereel**

Hose diameter							
¼"	⅜"	½"	¾"	1"	1¼"	1½"	2"
Hose lenght 5 meters							
		AVC1070					
Hose lenght 8 meters							
				AV 1200			
				AV 2201			
Hose lenght 10 meters							
AV C 1060	AV C 1038			AV 9329			AV 2080
AV C 1014				AV 9620			AV FOOD 2
AV C HP				AV 9814			
Doppi Tubo AV 1120							
Hose lenght 12 meters							
				AV 817			
Hose lenght 13 meters							
			AV 813	AV 3501			
			AV 1200	AVM 9815			
			AV 2201				
			AVM 9814				
Hose lenght 15 meters							
	AV 800		AVM 9815	AV 1300		AV 6003	
	AV 815			AV 2300		AV 2070	
	AV 1500			AV 3502			
	AV 1000			AVM 9816			
	AV C 3015						
	AV C 3016						
Hose lenght 17 meters							
			AV 817				
Hose lenght 18 meters							
			AV 1300				
			AV 2300				
Hose lenght 20 meters							
	AV 1100		AV 3501	AVM 9710	AV 6002		DN 50
	AV 2000		AV FOOD1	AVM 9817			AIR
	AV 2200		AVM 9320				VACUUM
	AV C 3010		AVM 9620				AV 2050
	AV C 3022		AVM 9816				
Hose lenght 22 meters							
		AV 825					
Hose lenght 23 meters							
	AV 820						
Hose lenght 25 meters							
AV 816			AV 3502	AV 5000			
	AV 3000		AVM 9320	AVM 9720			
	AVM 9810		AVM 9620				
			AVM 9817				
Hose lenght 30 meters							
			AV 5000	AV 6001			
Hose lenght 35 meters							
	AV 3500		AVM 9720	AVM 9850			
	AVM 9810						
		AVM 9811					

Hose diameter							
¼"	⅜"	½"	¾"	1"	1¼"	1½"	2"
Hose lenght 40 meters							
	AV 4000	AV 4500	AV 6001	AV 6501			
				AVM 9850			
Hose lenght 43 meters							
		AVM 9812					
Hose lenght 50 meters							
AVM 9810	AVM 9310	AV 6000SP	AV 6501				
	AVM 9610	AVM9510	AV 6301				
	AVM 9811	AVM 9813	AVM 9850				
Hose lenght 60 meters							
	AV 6000						
	AVM 9812						
Hose lenght 70 meters							
AVM 9811							
	AVM 9510						
	AVM 9710						
	AVM 9813						
Hose lenght 80 meters							
AVM 9812							
Hose lenght 100 meters							
AV 6300							
AV 6500							
AVM 9813							

1.2 Residual risks and security stickers.

The illustration shows the areas at greatest risk, with its present stickers indicating the residual risk and the main components of the system, as indicated below.

Stickers on the product	
Be careful not to force spring container	
Use personal protective equipment	
Hose installation instruction	

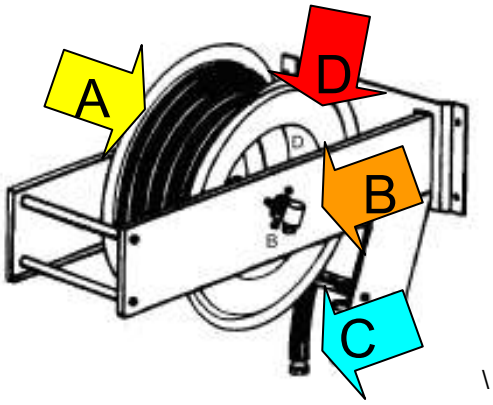

Main components and residual risks	
A	Pressure parts
B	Fluid inlet
C	Fluid outlet
D	Mechanical rotating

1.1 Uses not allowed

Always follow the use specified in Table 1.

2 Specification

The following table shows the essential technical characteristics of the different models.

The working pressure of the hose must not exceed the values shown in Table 2.

Dimensions, weights and connections.

Table 2:

Model	Diameter swivel joint	Working pressare of the hose	Maximum hose lenght				Weight	Overall dimensions	Swivel bracket
	inch	*bar*	*⅜”*	*½”*	*¾”*	*1”*	*kg*	*cm*	*model*
AV1000	½”	200	15	15			13	28x60x53	ST 15
AV1100	½”	200	20	20			17	28x60x53	ST 20
AV1120	n.2 x ½”	200		10			17	28x60x53	ST 20
AV1121	½” + ¼”	20		20			17	28x60x53	ST 20
AV1200	1”	20			12	8	17	28x60x53	ST 20
AV1300	1”	20			18	15	22	46x56x65	ST 22
AV3500	½”	200	35	35			28	33x61x65	ST 30
AV3501	1”	20			20	13	28	33x61x65	ST 30
AV3502	1”	20			25	15	29	33x61x65	ST 30
AV6000	½”	200	60	60			50	60x60x60	
AV6001	1”	20			40	30	50	60x60x60	
AV6300	½”	200	100 ¼”				65	60x60x60	
AV6301	1”	20			50		65	60X60X60	
AV815	½”	200	15	15			13	28x60x53	ST 15
AV820	½”	200	23	20			13	28x60x53	ST 15
AV816	½”	200	25 ¼”				13	28x60x53	ST 15
AV825	½”	200		22			18	28x60x53	ST 20
AV813	1”	20			13	8	14	28x60x53	ST 20
AV817	1”	20			17	12	14	46x56x65	ST 21

AV1500	½"	200	15	15			13	28x60x53	ST 15
AV2000	½"	200	20	20			17	28x60x53	ST 20
AV2200	½"	200	20	20			20	33x53x61	ST 20
AV2201	1"	20			12	8	20	33x53x61	ST 20
AV2300	1"	20			18	15	24	46x56x65	ST 22
AV3000	½"	200	25	25			26	46x56x65	ST 30
AV4000	½"	200	40				32	46x56x65	
AV4500	½"	200		40			34	46x56x65	
AV5000	1"	20			30	25	40	55x55x62	ST 50
AV800	½"	200	15	15			12	28x60x53	
AVC3015	½"	200	15	15			14	33x53x61	ST 25
AVC3020	½"	200	20	20			21	33x53x61	ST 26
AVC3016	½"	200	15	15			14	33x53x61	ST 27
AVC3022	½"	200	20	20			21	33x53x61	ST 28
AVC1060	¼"	10	10 ¼"				9	30x40x41	
AVC1070	½"	10		5			9	30x40x41	
AVC1014	¼"	10	10 ¼"				7	24x36x38	included
AVC1514	¼"	10	15 ¼"				7	24x36x38	included
AVC1038	3/8"	10	10				7	24x36x38	included
AVCHP	½"	100	10 ¼"				10	24x36x38	included
AV6002	1"1/4	10					55	60x60x60	
AV6003	1"1/2	10					55	60X60X60	
AV6000SP	½"	200		50			60	60x60x60	
AV2070	1"1/2	10				15	60	60x70x80	
AV2080	2"	10				10	60	60x70x80	
AVFOOD 1	1"	10			20		28	33x61x65	
AVFOOD 2	2"	10				10	65	65x70x80	
AV2050	DN 50	Vacuum				20	40	60x70x80	
AV100	½"	10	1,5 1/8"				1	20x20x10	
AVM9000	½"	200	20	20			6	30x40x41	
AVM9002	½"	200	20	20			8	30x40x41	
AVM9310	½"	200	50	35			12	33x53x61	
AVM9320	1"	20			20	10	12	33x53x61	
AVM9510	½"	200	70	50			13	33x53x61	
Model	Diameter swivel joint	Working pressare of the hose	Maximum hose lenght				Weight	Overall dimensions	Swivel bracket
	inch	*bar*	*⅜"*	*½"*	*¾"*	*1"*		*cm*	*model*
AVM9520	1"	20			35	20	13	33x53x61	
AVM9610	½"	200	50	35			14	33x53x61	
AVM9620	1"	20			20	10	14	33x53x61	
AVM9710	½"	200	70	50			15	33x53x61	
AVM9720	1"	20			20	10	15	33x53x61	
AVM9810	½"	200	35	25			10	33x53x61	
AVM9811	½"	200	50	35			10	33x53x61	
AVM9812	½"	200	60	43			11	46x56x65	
AVM9813	½"	200	70	50			11	46x56x65	
AVM9814	1"	20			15	10	10	33x53x61	
AVM9815	1"	20			20	15	10	33x53x61	
AVM9816	1"	20			25	20	11	46x56x65	
AVM9817	1"	20			30	25	11	46x56x65	
AVM9850	1"	20			50	40	15	60X56X65	

2.1 Noise.

The value of output noise (sound pressure level) is limited (<70 dBA). It remains to the supervisor check the level of noise exposure for each worker.

3 Delivery, shipping and installation.

3.1 Delivery.



The operator must:
• proceed to the discharge complying with the provisions of existing legislation on health and safety at work;
• remove any packaging, not dispersing to the environment;
• check the integrity of components and devices. If needed contact immediately our local dealer.

3.2 Shipping.

These goods must be carried out strictly according to the following rules:
• apply the existing legislation on health and safety (in particular as regards the total weight);
• remove any other devices that may constitute a hindrance;
• in case of manual lifting firmly grasp the system, while for systems with the greatest weight to use forklift or suitable harness;
• keep operators interested in the process of being moved to safe distance.



- In the case of transport by vehicle make sure the degree of stability before moving.

3.3 Installation.



• The installation must be performed by skilled technicians.
• <u>The installation of the hose and the spring can be found as described in the section on maintenance.</u>
• Do not place the hosereel near sources of heat or flame.
• Keep a safe distance from power cables under tension.
• The hosereel should be installed in a position which not danger to the operators (eg shearing, lightning, or fall).
• Ensure in advance the consistency of the wall where hosereel have to be installed.
• Assess in advance the total weight of the product (hosereel+hose+fluid) you are installing both the fitting hardware and for the lifting.

3.3.1 Hose reel installation



• When lifting, use appropriate lifting harness or suitable;
• Strictly follow the existing legislation on work safety.
• Insert wall anchor bolts in all the holes of the hosereel support/base.

The operator must follow these rules:



- The hose reel should be attached to the wall by means (eg bolts) adequate and properly sized to the weight of the product and to the stress that this could be put in operation by the operators.
- The hose reel plate is designed with 13 mm diameter holes.
- The anchor bolts can therefore lead screws with maximum diameter of 12 mm.



- The connection to the swivel joint (hosereel inlet) must be made through the use of a flexible hose.

4 Safety

4.1 Working environment. Environment condition Temperature between 5°C to 40°C.



- Keep the product far from flames.
- Do not install the product in places where there are risks of explosion and fire.



- The hosereel should be installed at a location which does not pose a danger to the operators.
- Make advance of the resistance and the characteristics of the wall on which the product is fixed.
- Use appropriate anchor bolts to the wall depending on the type and structure of the same;
- Assess the overall weight of the product always being installed for the fixing method for the type of lifting equipment to be used as an aid.



- Use the product in conditions of adequate lighting.
- The areas of work must be well ventilated and meet regulatory requirements on hygiene and safety at work.

4.2 Preliminary checks.



- Keep a safe distance in voltage electric cables;
- In the case where there are live cables is recommended to give the hosereel a special casing.



- Place connection line in position would not constitute a hindrance to other operators.

4.3 Use.



- Once you disengages the mechanical latch from the rack, you need to drive back (keeping on hand) the hose during the roll-up to avoid a rapid and uncontrolled movement of the reel.

- The product is designed for use by a single operator, responsible and adult.
- All visitors don't use the product must maintain a safe distance during the working phases.



- The user should always wear appropriate protective equipment during use of the product (ie, gloves, overalls, shoes, sunglasses);
- Before using the product, you must always get the MSDS of the material used and follow the advice contained within it.

4.4 Personal protective equipment



- Is liability of the company owner to provide appropriate Personal Protective Equipment and inform the staff on their correct use.



- The operator must always observe the instructions given by the sign shown on the product.

- PPE (Personal Protective Equipment) for an operator to use during the operations of use, maintenance and cleaning are: Workwear, Non-skid shoes, gloves and glasses.





4.5 Maintenance and after work.



- Do not service when the system is under pressure, or connected to an hose in pressure or an electrical power source.
- When disassembling winder (eg to replace the tube or spring) to pay particular attention to any sudden movement of the roller (risk of crushing of the hands).



During the maintenance phase is recommended to adopt appropriate protective equipment. Do not dispose of any residues in the environment, but stick to the current legislation.

5 Rules of Use.

5.1 Preliminary checks.

Always perform the following checks:



If the hose reel is well fixed to the wall.



Presence of electrical wires under power.

5.2 Using automatic hose reel with spring.

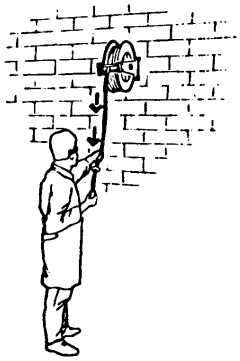

Step 1: grab the hose and proceeds to drive it. During this phase, the mechanical latch disengages from the rack. Move closer to the working area.



Step 2: at the release of the hose the mechanical latch arrest the roll turning and prevent the return, the locking happens every half turn of the roller. When the roll is blocked proceed to use.

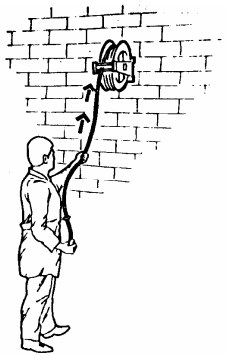

Step 3: After use, going closer to the hosereel. The operator can roll up the hose (releasing the latch) by pulling the tube, which will unlock the mechanical lock.



Once the latch is released is necessary to drive back (keeping on hand) the hose on the reel to avoid a rapid and uncontrolled movement of the hose.

5.3 Operation manual reel.

Just firmly grasp the handle and rotate the roller, with the other hand it is advisable to drive the hose inside the reel.

5.4 End job

We recommend: Place the hose in proper position (storing it inside hosereel) and download the residual pressure in the hose.

6 Maintenance



• Do not service the system when the spring is under tension or when there is residual pressure in the connecting hose. Please download any residual pressure in the hose and store the hose inside the hosereel;
• Wear appropriate protective equipment.



• Do not put your hands or other objects inside the reel. If the reel is locked never try outside intervention operations with screwdrivers or wrenches or other tools, but contact our technical support.
• Before you install hose verify that the technical characteristics fall between those for the model chosen. Do not force the spring to not carry it out.

6.1 Routine Maintenance.

model	schedule	activities to be carried
All	every 1500 hours	Check spring tension
		Check wear locking system
		Check joints and condition of the hoses
		Check wall mounting

6.1.1 Replacing the hose and the tensioning of the spring.

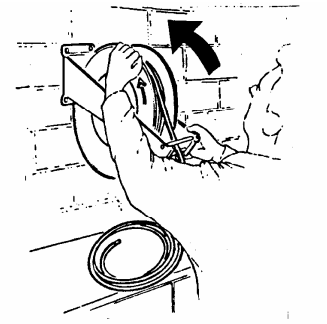

Installation instructions on tube:
OPEN REEL (with roll in sight)
Operations to be performed by trained personnel

WARNING: PROTECT YOUR HANDS WITH GLOVES!

• Make the connection between the hose and hose reel;
• Wrap the hose around the reel turning the reel in the direction indicated by the arrow.
• Perform the rotation manually protecting hands with gloves;
• Determine the starting point of the spring work, this position can be found by rotating the reel to the point where it detects the start of the tension of opposition to the rotation of the spring;
• Rotate the reel (number of turning) indicated by the label in the opposite direction to the arrow, taking care to keep the hose attached to reel central band.
• Take out the hose from the roller guide, lock the reel by observation of the latch mechanism;
• Fix the hose bumper on the hose.

Installation instructions on tube:
CLOSED REEL (with cover)
Operations to be performed by trained personnel

WARNING: PROTECT YOUR HANDS WITH GLOVES!

• Remove the four screws on the left side of the hosereel;
• Insert the hose on front opening;
• Make the connection between the hose and hosereel;
• Wrap the hose on hosereel turning the roller in the direction of the arrow through the insertion of a wrench 10 mm hex socket on the plastic hub of the left side of the hosereel;
• The rotation in both directions should be undertaken with caution by the user to prevent loss of the hub from the support.
• When there is approximately one meter of hose fix the hose bumper;
• Determine the starting point of the spring, this position can be found by rotating the roller (with the hex key) to the point where it detects the start of the tension of opposition to the rotation of the spring;
• Turn the hub (number of turning) indicated by the label in the opposite direction to the arrow, always using the hex key 10 mm, keeping it firmly;
• Always keep a strong grip to the hex key (to avoid rolling the spring and then free rotation of that key) then fix the four screws on the left side of the hosereel.



• Do not put your hands or other objects inside the reel
• An excessive tension spring prevents the complete withdrawal of the hose

To perform these operations follow the instructions on the label on hosereel side.

6.2 Demolition and Disposal

Demolition:

- For the disposal of the unit, perform the following sequence::
  - ✓ disconnect hose reel from feeding hose;
  - ✓ detach the unit from the wall to which they apply;
  - ✓ disconnect all hoses;
  - ✓ separate plastic parts;
  - ✓ disconnect the mechanical parts.



Disposal:

- The buyer is responsible for making the proper disposal of materials arising from the sale of industrial equipment in accordance with rules, laws and regulations in your country.

Demolition materials:

- The product, in its various forms, is made by the following main components whose source material is composed of:
  - ✓ Stainless steel;
  - ✓ painted steel sheet;
  - ✓ plastic components;

7 Parts

Annexed to this manual and operating tables are used to identify the different components from which the reel is made up and facilitate the client to request any replacement components.

8 Problem Cause Remedy

Problem	Cause	Remedy	Intervento Action
Hosereel blocked	Rack blocked Excessive spring tension	Perform operation set out in paragraph 6.1.1	operator
Hosereel leacking	Detective swivel joint	Replace swivel joint or sealing	Contact technical support
The hose do not roll up automatically (on automatic hosereel)	Spring discharge	Increase tension of the spring (see 6.1.1)	Operator

9 Accessories

On request may be provided with a swivel bracket. On Table 2 is shown for each model the code of the swivel bracket.

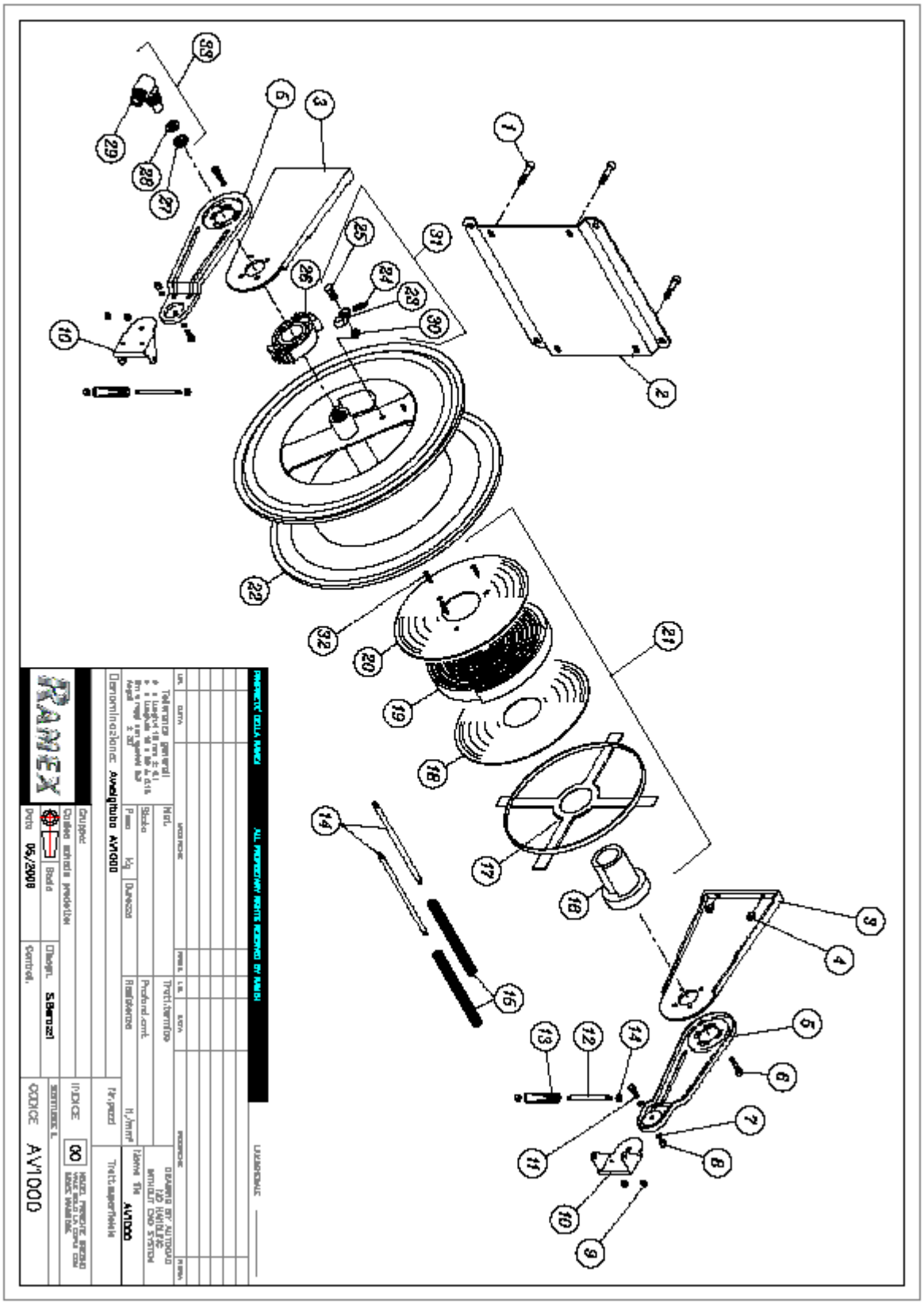
RAMEX
Data 05/2008
Dimensionazione: Avvolgitubo AV1000
Tratt.superficiale
INDICE 00
CODICE AV1000

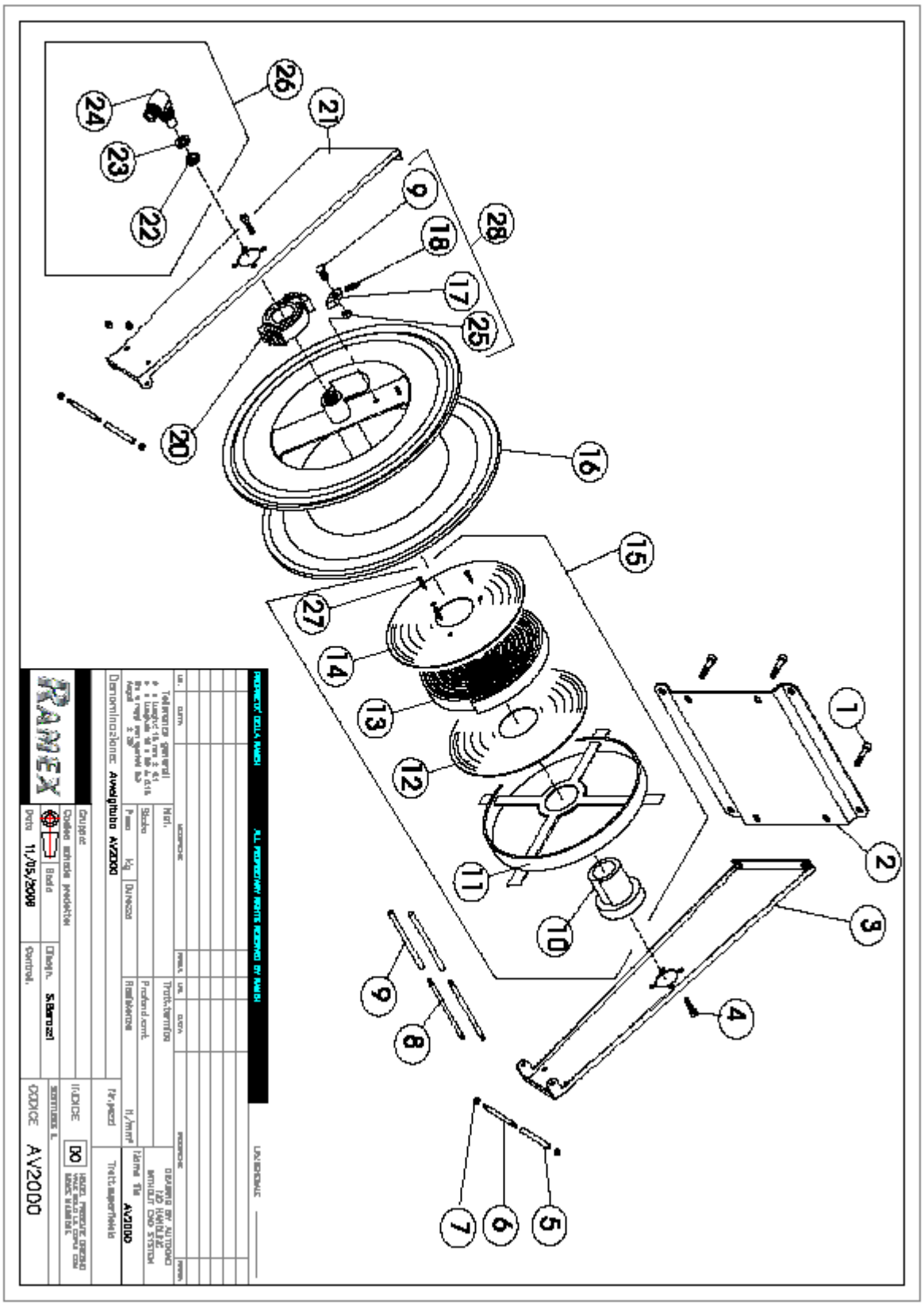

1
2
3
4
5
6
7
8
9
10
11
12
13
14
15
16
17
18
20
21
22
23
24
25
26
27
28
Denominazione: Avvolgitubo AV2000
Data 11/05/2008
Disegn. S.Barozzi
Control.
Trattamento
Profond.cont.
Rasiatura
Nr.pezzi
Trattamento
Tratt.superficiale
Nome file AV2000
Codice AV2000

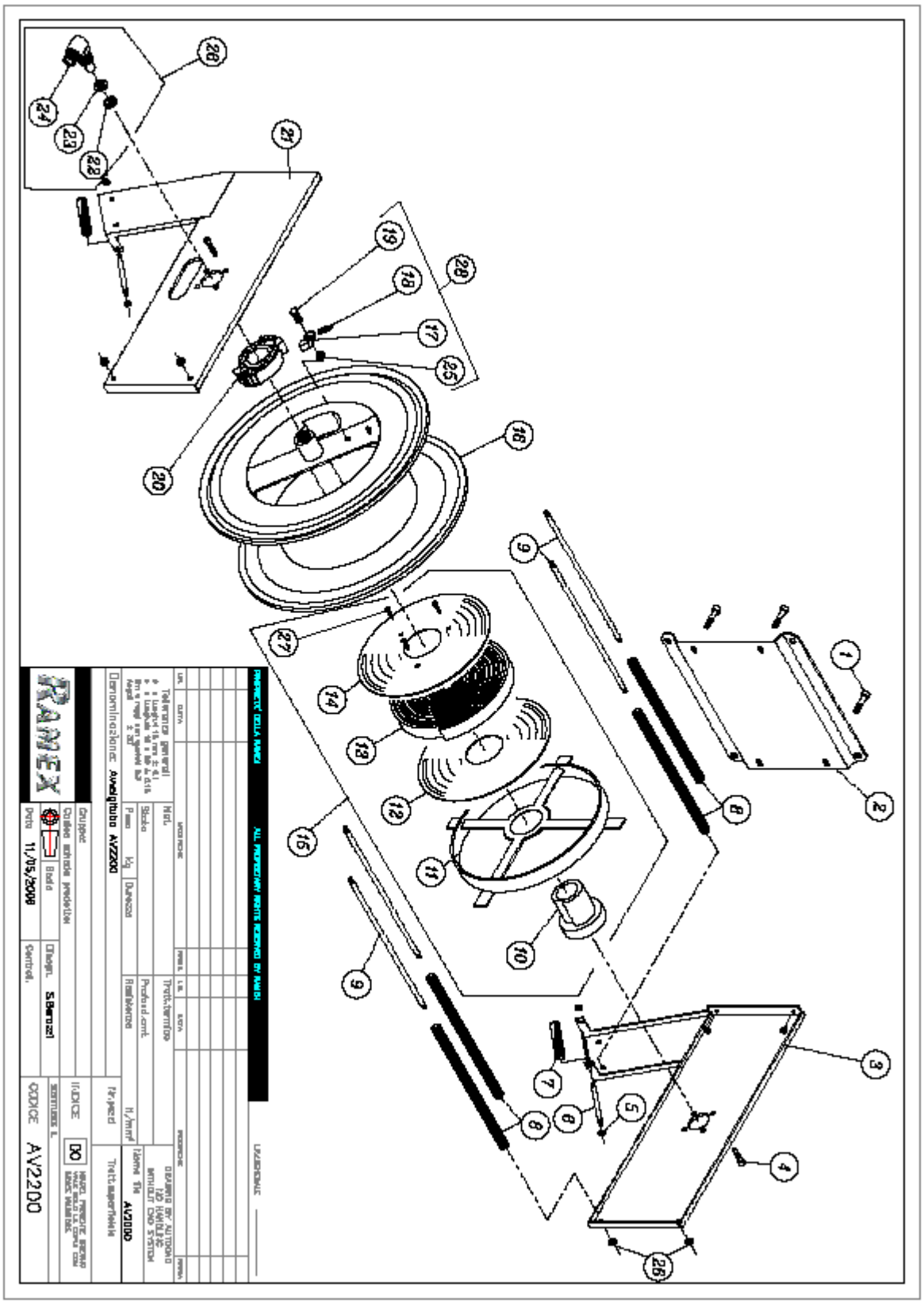
PROPRIETÀ DELLA RAMEX
ALL PROPRIETARY RIGHTS RESERVED BY RAMEX
Denominazione: Avvolgitubo AV2200
Data 11/05/2008
Disegn. S.Berozzi
Controll.
CODICE AV2200
Nome file AV2200
Tratt.superficiale
Nr.pezzi
Gruppo
Classe schede predette
Scala
Peso kg
Durezza
Resistenza N/mm²
Profond.cmt.
Tratt.termico
Mat.
RAMEX

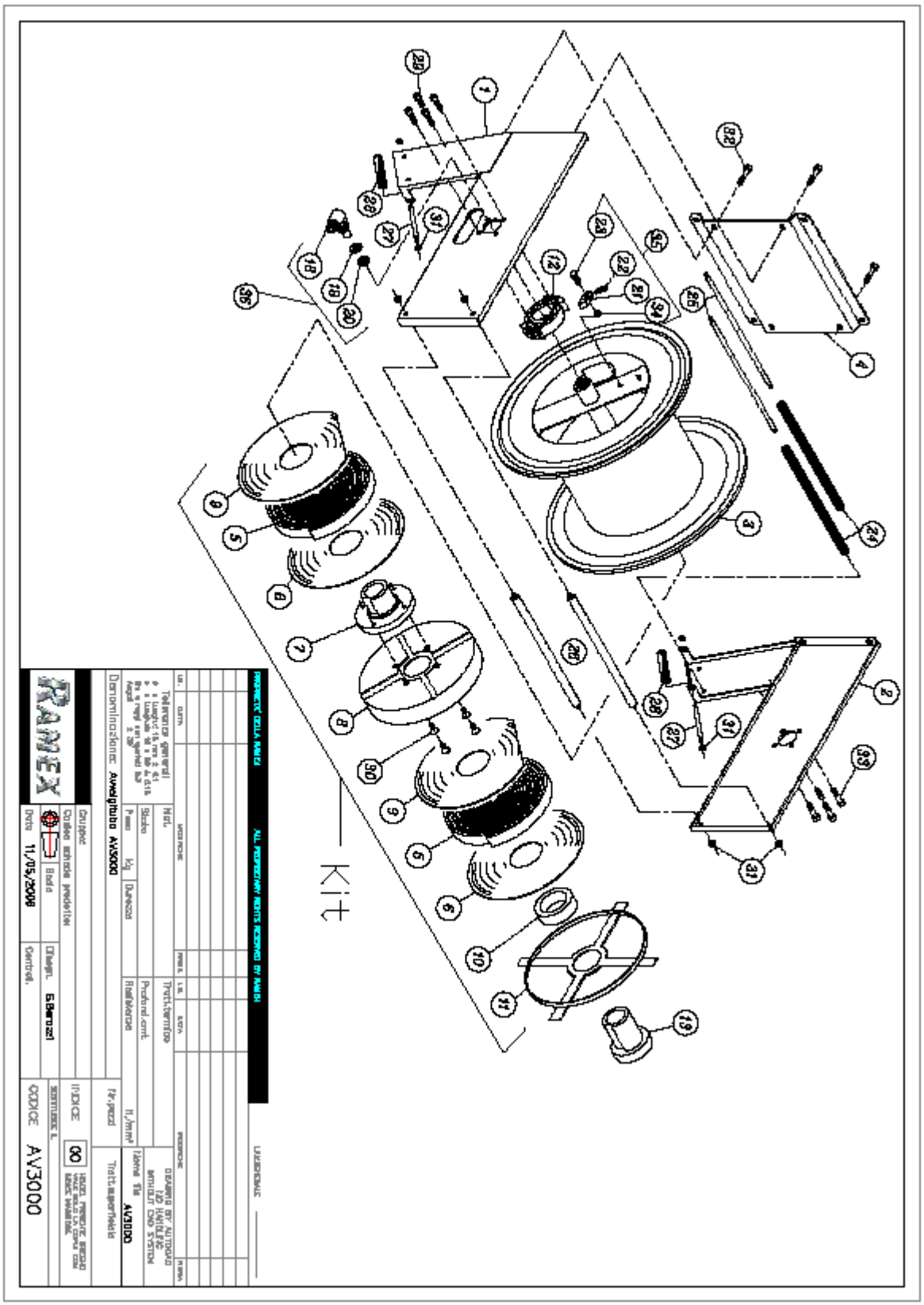
Kit

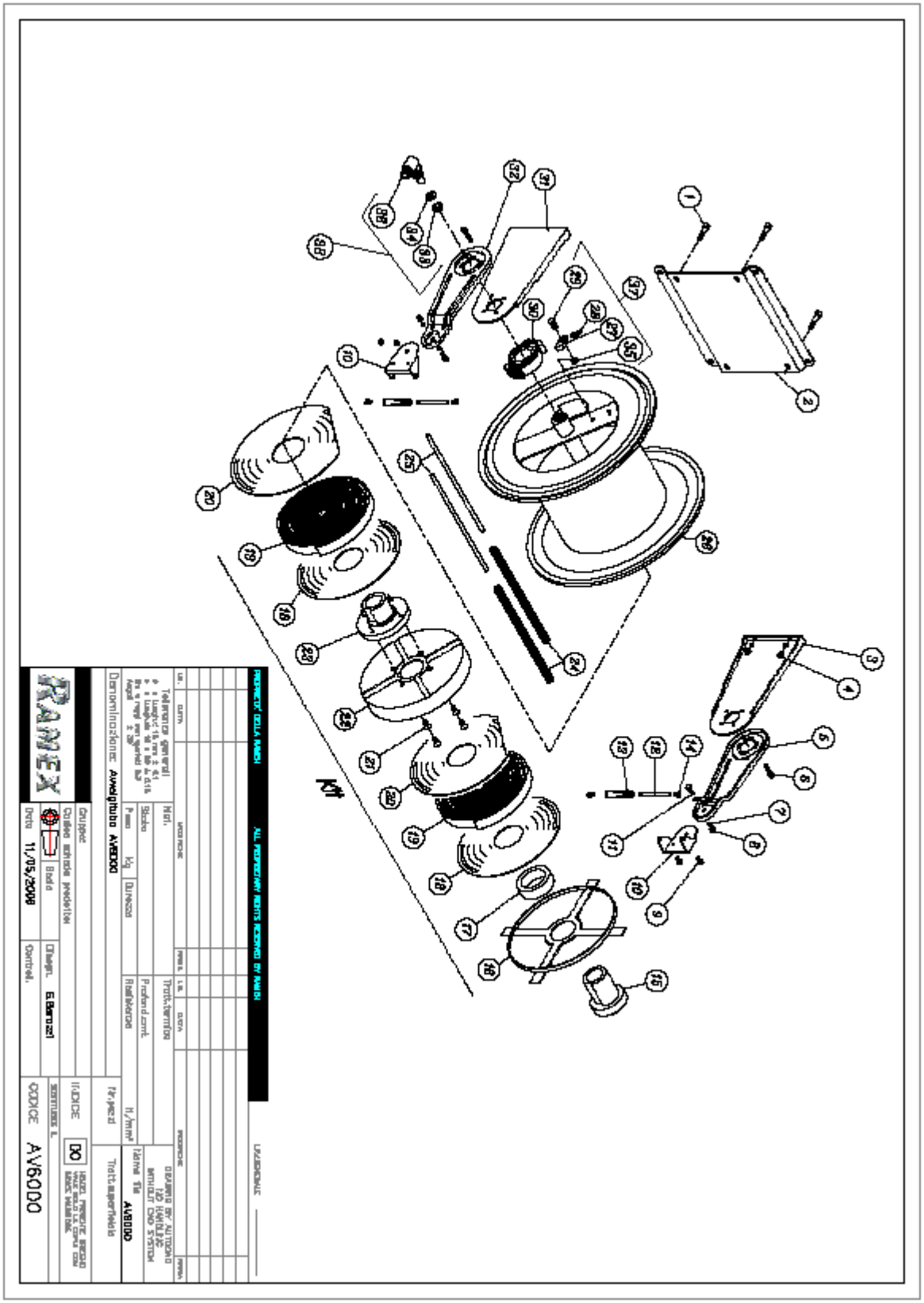
PROPRIETA' DELLA RAMEX
ALL PROPRIETARY RIGHTS RESERVED BY RAMEX
Dimensione: Avvolgitubo AV6000
Gruppo:
Data 11/05/2008
Disegn. E.Barozzi
Controll.
Tratt.superficiale
Nr.pezzi
Nome file AV6000
CODICE AV6000
RAMEX

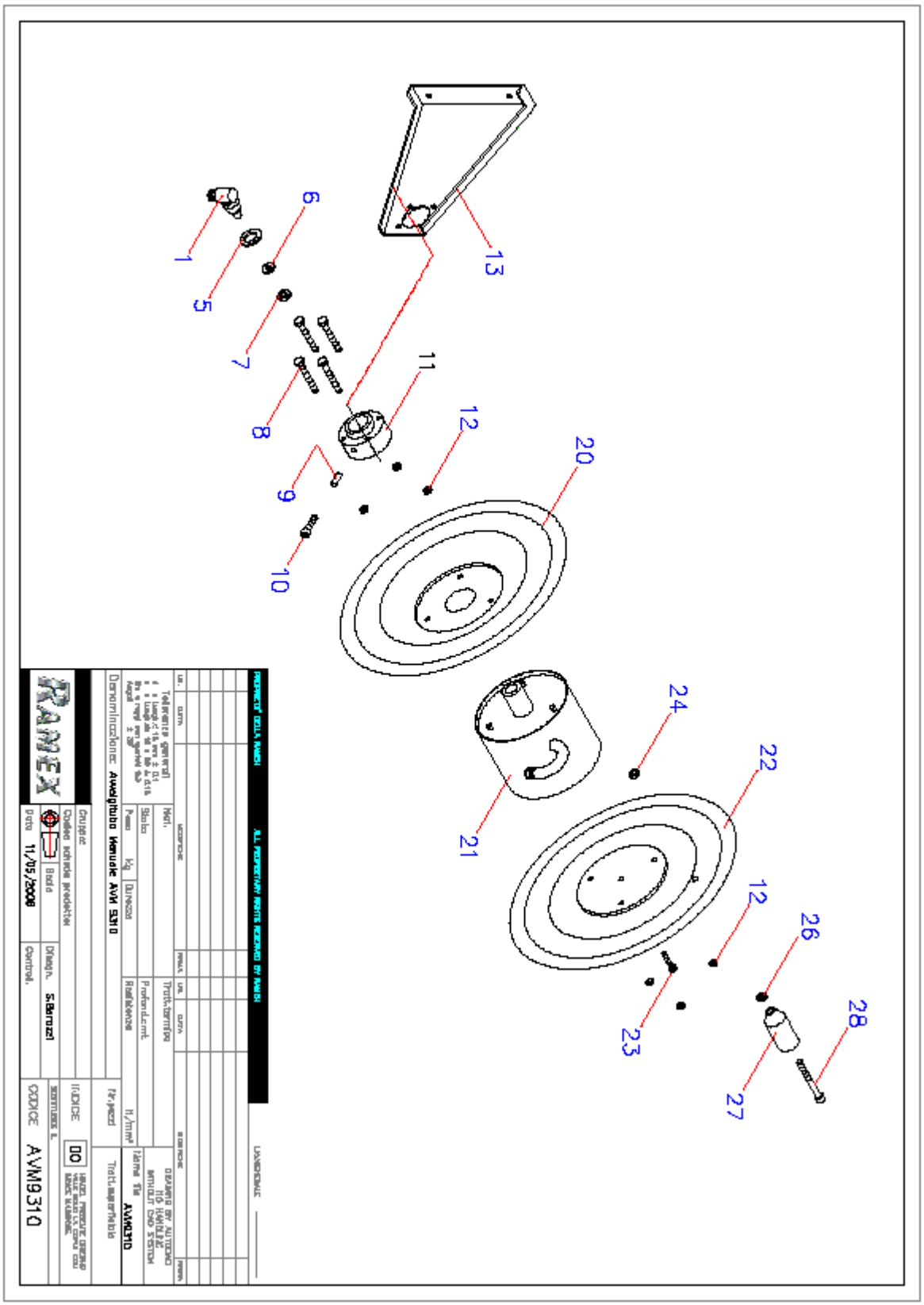
1
5
6
7
8
9
10
11
12
13
20
21
22
23
24
26
27
28
RAMEX
AVM9310
S.Barrozzi
11/05/2006

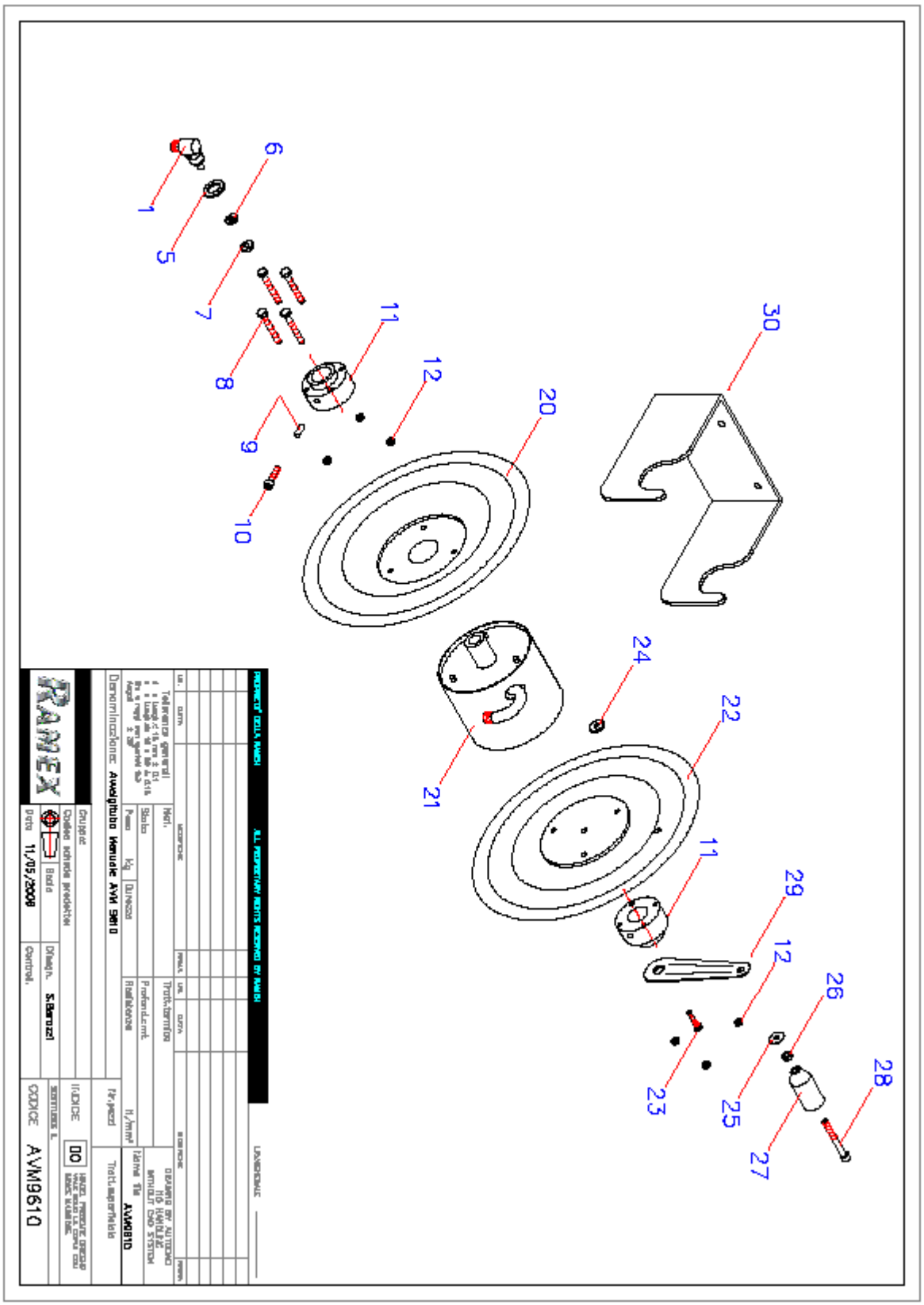
1
5
6
7
8
9
10
11
12
20
30
24
22
21
11
29
12
26
28
23
25
27
Denominazione: Avvolgitubo Manuale AVM 9610
Data 11/05/2008
Disegn. S.Barozzi
Control.
Indice 00
Codice AVM9610
AVM9610

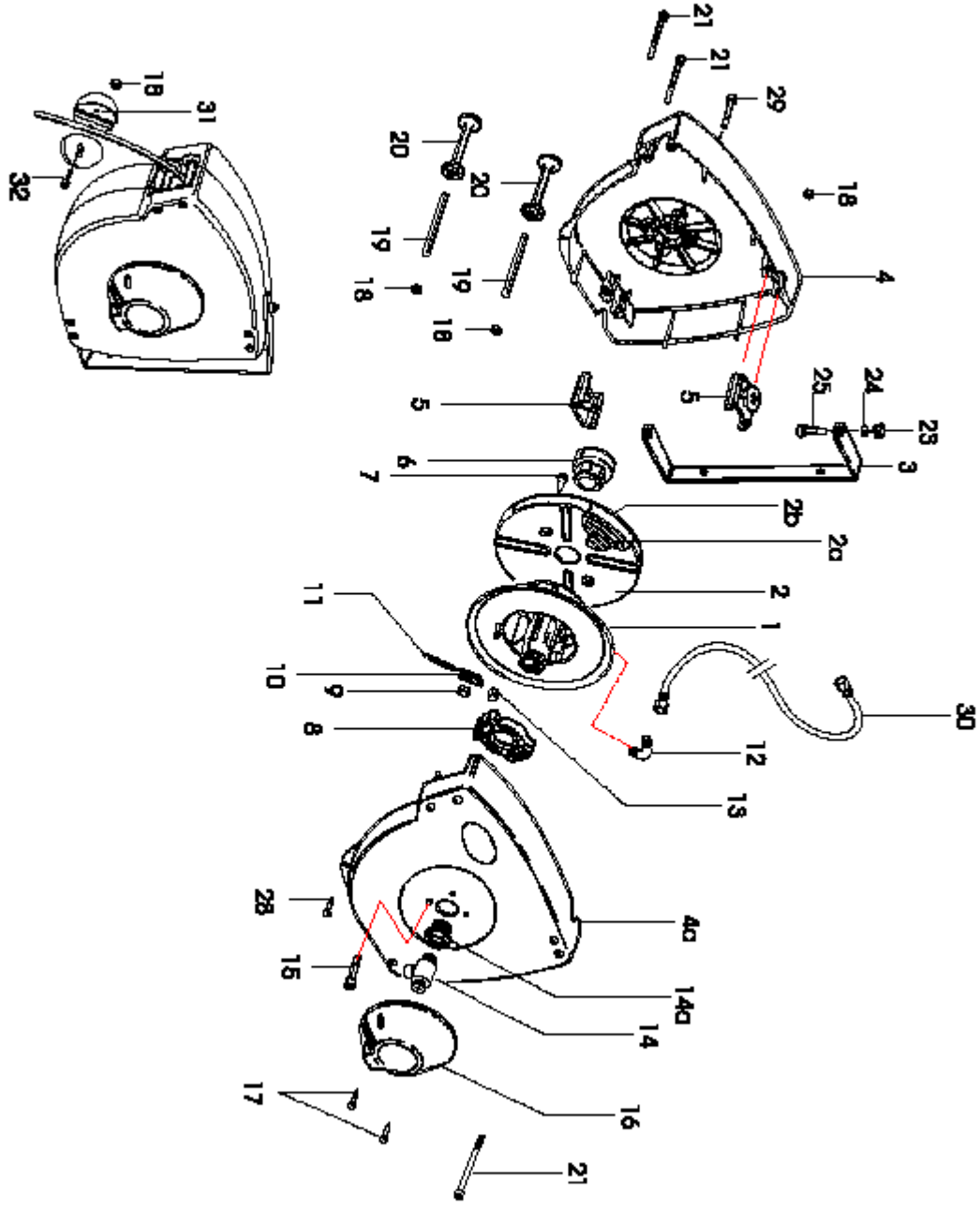
21
21
29
18
4
20
20
19
19
18
18
18
31
32
5
5
25
24
23
3
6
7
2b
2a
2
1
11
10
9
8
12
30
13
28
4a
15
14a
14
17
16
21