YOU CAN DEPEND ON
DAVEY



WaterMark

DAVEY RainBank® EVO

Model Numbers:
KRB1, KRB2, KRB1NF, KRB2NF, KRB3, KRB4, KRBX1, KRBS1, KRBS2, KRBSA1

GUARANTEE
3 YEARS

APPLICATIONS

RainBank is ideal for metropolitan rainwater harvesting on homes, toilet blocks and garden irrigation.

RAINWATER TANK SYSTEM

FEATURES & BENEFITS

RainBank EVO is a dual source controller system specifically designed to source rainwater for water applications such as toilets and/or laundry, with automatic mains water back-up. Also suitable for exterior taps.

- **Patented, yet uncomplicated technology,** providing a dependable solution to rainwater harvesting
- **RainBank automatically switches between rainwater and mains water supply,** so you don't need to think about it
- **Fits neatly in the top of the tank** for a space-saving, sleek design
- **Incorporates easily with new homes and buildings.** All installation materials are included to save you time and money.
- **Placement of the connection points** saves time on installation
- **Environmentally friendly:**
  - Saving water
  - Reduced inflow to stormwater systems
  - No re-pumping of mains water
  - Low power consumption in standby
- **No solenoid valves used.** Provides seamless mains backup in the event of no rainwater or electrical interruptions.
- **Built-in backflow protection valve (dual check valve) in compliance with the requirements of AS/NZS 3500-1-2003** for added safety and assured protection of your mains water supply
- **RainBank control module has Watermark approval** under licence WM-022042

Rainwater Harvesting

DAVEY

OPERATING LIMITS	
Maximum flow rate (mains)	80 lpm
Maximum flow rate (pump)	80 lpm
Maximum mains water pressure	600 kPa
Maximum pump pressure	350 kPa
Maximum pump amps	10 amps
Level switch voltage	12 volts DC
Maximum water temperature continuous	50°C
Minimum water temperature	1°C
Maximum ambient temperature	50°C
Mains water inlet size	20mm nylon olive
Rainwater inlet size	25mm PVC
Outlet size	20mm nylon olive

MATERIALS OF CONSTRUCTION	
PART	MATERIAL
Dual check valve	
Body	Nylon
Valves	Acetal
Springs	304 stainless steel
Source control valve	
Body	Nylon
Valves	Acetal
Plunger	Grivory
Diaphragm	Santoprene
Springs	316 stainless steel
Seal	Nitrile
Filter Lid	Polycarbonate
Sensor plate	316 stainless steel
Enclosure	A.B.S.

ELECTRICAL DATA	
Supply voltage	220-250V
Supply frequency	50Hz
Max. full load current	10A
Enclosure class	IP23
Power supply lead	incoming 3.5m
Pump lead	10m

SYSTEM HYDRAULIC PERFORMANCE WITH RAINWATER

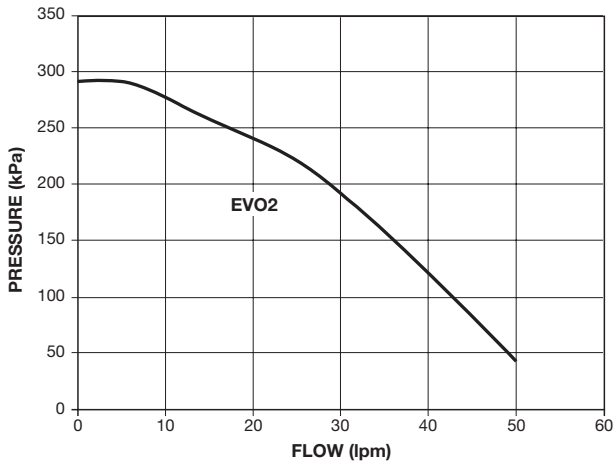

IMPORTANT

Must be installed by a licensed plumber.

DIMENSIONS (mm)

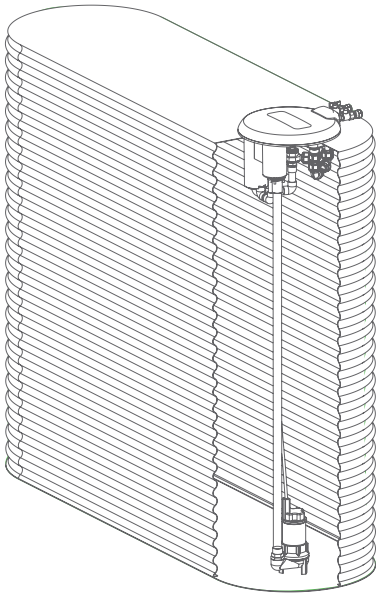

SIDE VIEW

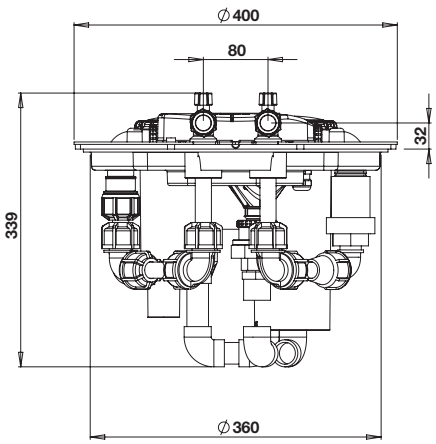

TOP VIEW

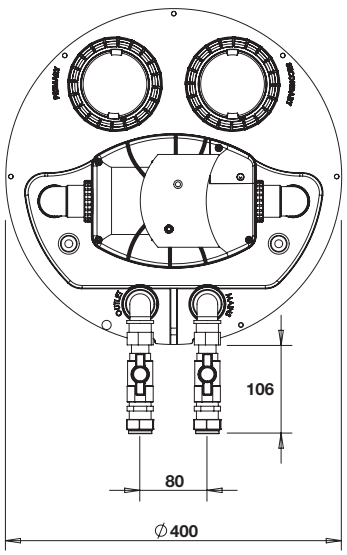

H/O & MFG SCORESBY
Certified System Quality ISO 9001
Certified System Environment ISO 14001

daveywater.com

This literature is not a complete guide to product usage. All images provided in this document are for illustration purposes only. Further information is available from your Davey Dealer, Davey Support Centre and from the relevant product Installation and Operating Instructions. Must be read in conjunction with the relevant product Installation and Operating Instructions and all applicable statutory requirements. Product specifications may change without notice.
® Davey is a registered trademark of Davey Water Products Pty Ltd. © Davey Water Products Pty Ltd 2026.

DAVEY

DWP0054-5/0324