GENERAL PUMP *A member of the Interpump Group*

RV3

Regulating Valve



FEATURES

- **Regulates the operating pressure of the system by releasing excess volume through the by-pass**
- **Limits pressure in the system to the adjusted level**
- **Protects the system from over pressurization**
- **Suitable for controlling several units at the same time**

SPECIFICATIONS

MODEL	MAXIMUM GPM	MAXIMUM PSI
RV3/300	132.2	4350
RV3/450	53.0	6500

Port Sizes:	Inlet	1-1/4” - 11 BSPP
	By-pass	1-1/4” - 11 BSPP
Weight		26.4 lbs.
Materials:	Upper Valve Body	GS600 Cast Iron
	Lower Valve Body	SPF600 Cast Iton
	Valve and Valve Seat	AISI 420 SS with Stellite

WARRANTY

General Pump accessories are warranted by the manufacturer to be free from defects in material and workmanship. Period of warranty shall be 90 days from the date product is received by the original buyer. Liability of manufacturer under the foregoing warranty is limited to **repair** or **replacement** at the option of manufacturer of that product which according to the manufacturer’s investigation was deemed defective at time of shipment. Damage resulting from neglect, abuse, tampering or misapplication voids this warranty. This warranty is in lieu of all other warranties, expressed or implied, including any warranty of merchantability and/or any and all other obligations or liabilities on the part of the manufacturer.

RV3

Regulating Valve

GENERAL PUMP *A member of the Interpump Group*

PARTS LIST

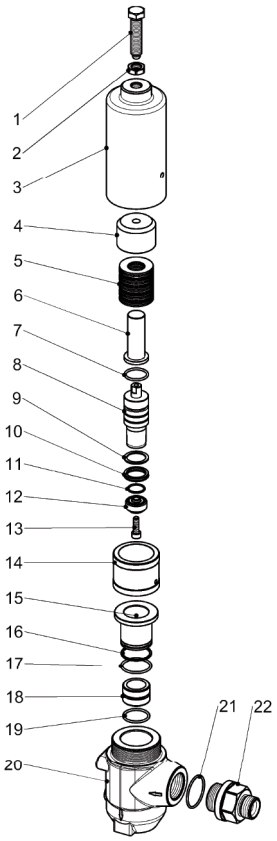

Item	Part Number	Description	Qty
1	F003000040	Screw, Pressure Adjusting	1
2	F872002108	Nut, Lock	1
3	F062300140	Cover, Valve	1
4	F030200030	Spacer, Spring, SS AISI 420	1
5	F94858200	Spring, Disc, Ø50x25.4x2.5 (RV3/450)	18
	F872110427	Spring, Disc, Ø50x25.4x3 (RV3/300)	15
6	F021200120	Guide, Spring, SS AISI431	1
7	F90396900	O-ring, Ø 30x3	1
8	F074200080	Piston, SS AISI 420	1
9	F010500010	Ring, Anti-extrusion	1
10	F90275200	Packing, Ø 28x36x7, L.P.	1
11	F90369000	O-ring, Ø 22x2	1
12	F083200090	Piston, Ball, SS AISI 420	1
13	F99307100	Screw, TCEI M8x25 AISI 420	1
14	F042000010	Stop, Shuttle, Steel	1
15	F021200110	Shuttle, Valve, SS AISI 431	1
16	F90523000	Ring, Anti0extrusion, Ø40x44.8x1.5	1
17	F90397300	O-ring, Ø 40x3	1
18	F081200270	Seat, Valve	1
19	F90397100	O-ring, Ø 34x3	1
20	F060100300	Body, Valve	1
21	F90388500	O-ring, Ø 45.69x2.62 (RV3/450)	1
22	F36005066	Connector (RV3/450)	1

Item #s Included	# of Pieces	KIT
7, 9, 10, 11, 12, 13, 16, 17, 18, 19	1	F1239

INSTALLATION

The RV3 valve can be mounted on the pressure line in any position (horizontal or vertical) which will allow easy access to the pressure adjusting screw. For proper operation, the by-pass line internal diameter should be at least 1.6 inches at the narrowest point, and should not be connected directly to the pump inlet line (see below for correct installation).

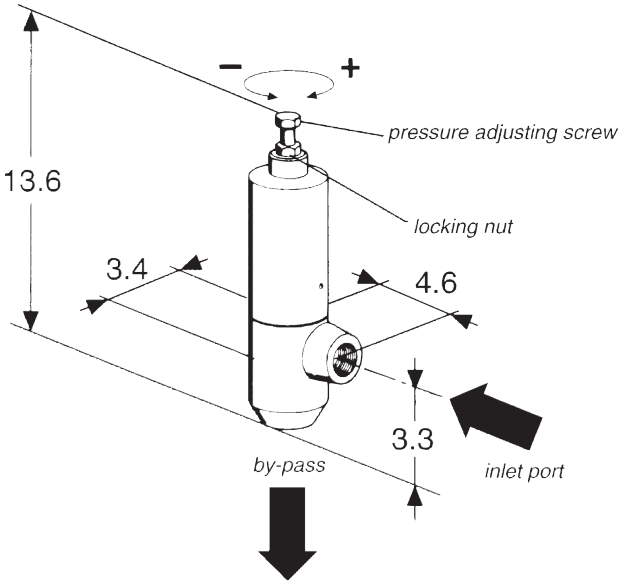

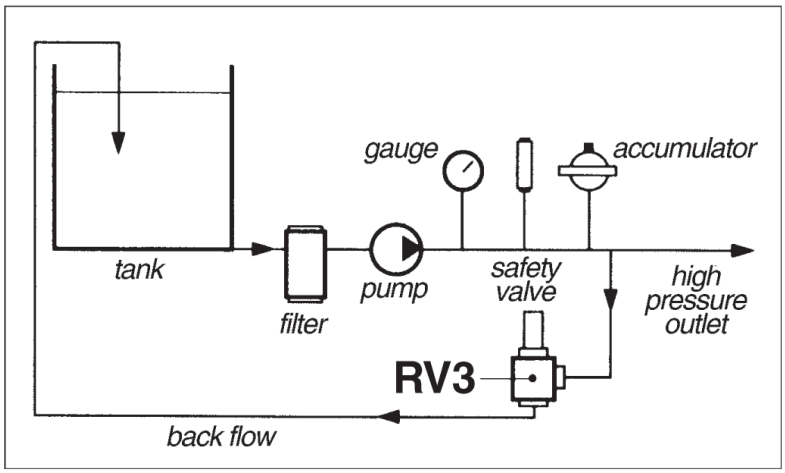

Ref 300805 Rev. C
08-09

GENERAL PUMP 1174 Northland Drive • Mendota Heights, MN 55120
Phone: 651.686.2199 • Fax: 800.535.1745 • e-mail: sales@gpcompanies.com • www.generalpump.com

GENERAL PUMP