GENERAL PUMP *A member of the Interpump Group*

RV3/300

Pressure Regulating Valve



FEATURES

- **Regulates the operating pressure of the system by releasing excess volume through the by-pass**
- **Protects the system from over pressurization**

SPECIFICATIONS

Part Number		**RV3/300**
Maximum Pressure		4350 PSI
Maximum Flow		132.0 GPM
Maximum Temperature		140ºF
Port Sizes:	**Inlet**	1-1/4” BSP-F
	Outlet	N/A
	Bypass	1-1/4” BSP-M
Weight		26.4 lbs.

DIMENSIONS

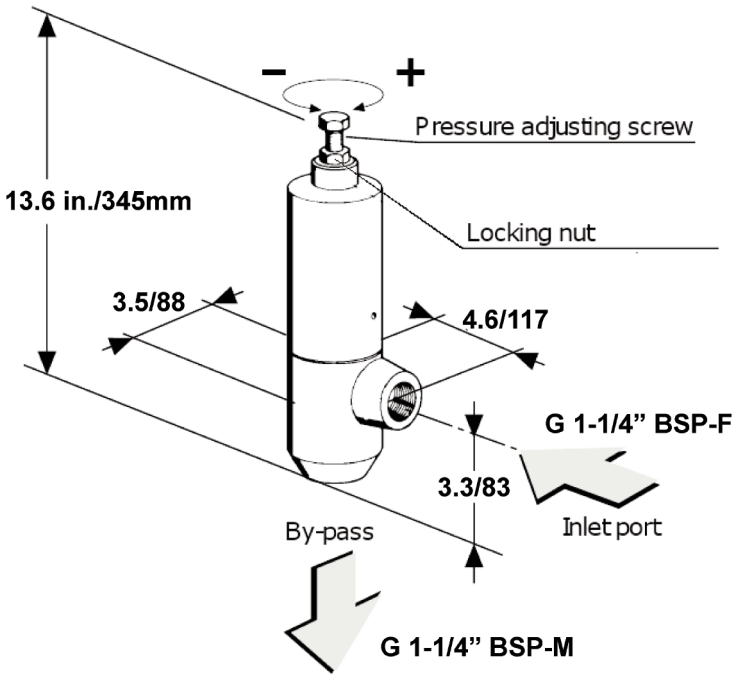

RV3/300

Pressure Regulating Valve

GENERAL PUMP *A member of the Interpump Group*

PARTS LIST

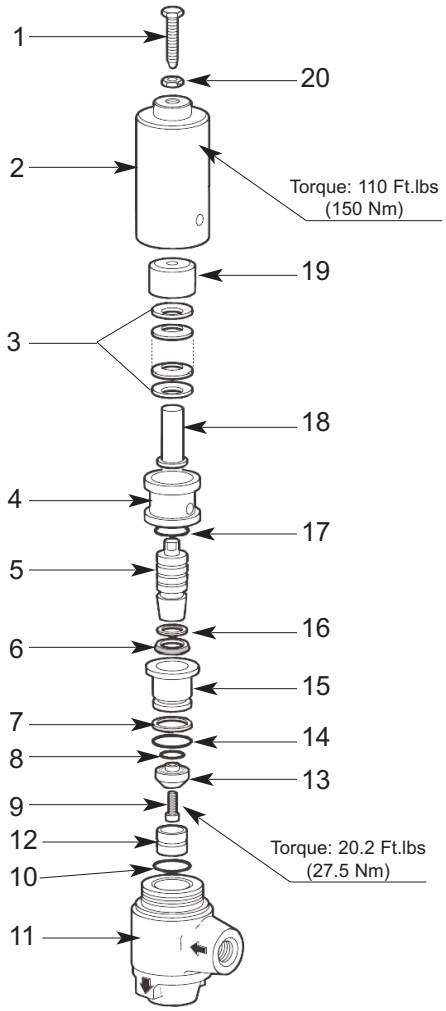

Item	Part Number	Description	Qty
1	F003000040	Regulating Screw	1
2	F062300140	Valve Cover	1
3	F872110475	Belleville Washer Ø 25.4x50x3	15
4	F042000010	Bushing, Stop	1
5	F074200080	Piston	1
6	F881030012	Seal Ring, Ø 28	1
7	F881112005	Ring for O-ring	1
8	F881011051	O-ring, Ø 22x2, Spec.	1
9	F871121704	Screw, TCEI, M8x25	1
10	F881011156	O-ring, Ø 34x3	1

Item	Part Number	Description	Qty
11	F060100300	Valve Body	1
12	F081200270	Valve Seat	1
13	F083200090	Valve Pad	1
14	F881011158	O-ring, Ø 40x3, Spec.	1
15	F021200110	Sleeve	1
16	F010500010	Anti-extrusion Ring	1
17	F881011154	O-ring, Ø 30x3	1
18	F021200120	Spring Guide Bushing	1
19	F030200030	Spring Spacer	1
20	F872002108	Nut, M16	1

REPAIR KIT

Item #s Included	# of Pieces	Kit #
6, 7, 8, 9, 10, 12, 13, 14, 16, 17	1	F1239

GENERAL PUMP

RV3/300

Pressure Regulating Valve

GENERAL PUMP *A member of the Interpump Group*

INSTALLATION AND INSTRUCTIONS FOR USE

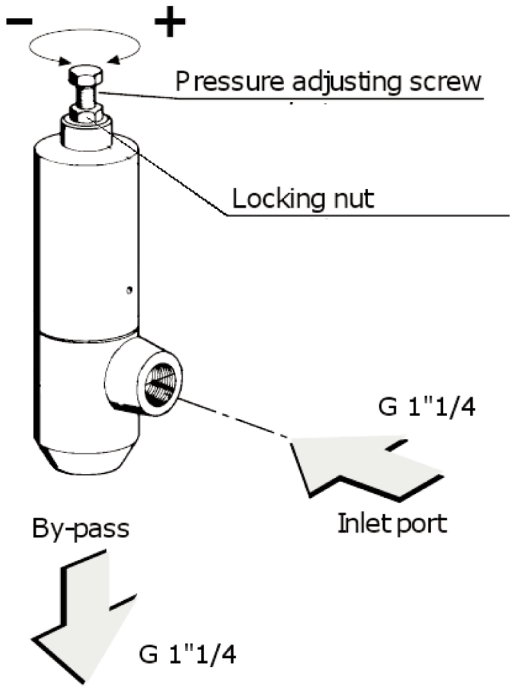

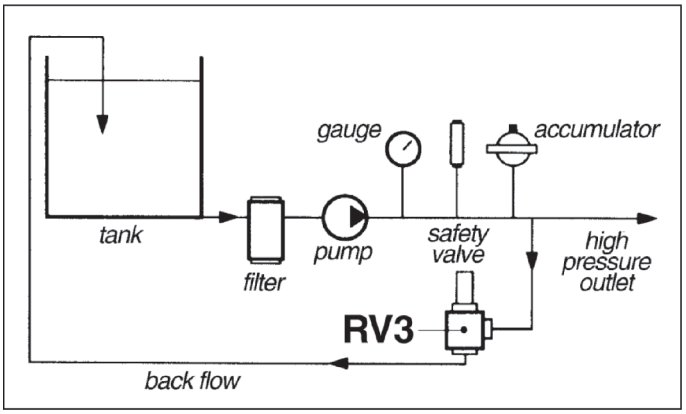

1. GENERAL INFORMATION

1.1 The **RV3/300 pressure regulator** is a manually adjustable, pressure operated device, which, according to its setting, limits the pumps/system pressure by conveying the excess of water to the by-pass. Moreover, when the outlet flow is blocked, this device totally releases the flow, thus keeping the pump/system at the adjusted pressure.

1.2 Since the RV3/300 valve is used in conjunction with a high pressure water pump/system, which shall be called hereafter only “system”, installation and use must be suited to the type of system used and comply with the safety regulations in force in the country where the valve is used.

1.3 Before using the valve, make sure that the system to valve is used with is certified to comply with the relevant directives and/or regulations.

1.4 Before installing and using the valve for the first time, we suggest you check that it is undamaged and make sure that the rated features correspond to the required ones. If this is not the case, do not use the valve and contact the Customer Service Department.

1.5 In order to install the valve correctly, follow the instructions for the water inlet, outlet and by-pass connections, as stated in this manual and/or the valve itself.

2. INSTRUCTIONS FOR PRESSURE SETTING

2.1 In order to obtain a correct adjustment and consequently a proper functioning of the valve, always make sure that, when working at the maximum pressure, the valve by-pass keeps releasing a quantity of water equal to 5% of the total flow rate. In case the flow rate at the by-pass is close to zero or exceeds 15% of the maximum flow rate, this could cause failure, early wear and result in situations of danger.
The positions mentioned in the following instructions refer to those shown in the parts list on page 2.

2.2 Connect the valve to the water system and follow these steps:

2.2.1 Loosen the nut (pos. 2).

2.2.2 Unscrew the nut (pos. 1) in order to completely release the springs.

2.2.3 Open the gun or the water control device and start the system. Make sure the air contained in it is fully ejected.

2.2.4 Keeping the gun or the water control device open, start adjusting the pressure by screwing down the screw (pos. 1). Alternate the adjusting operations with a few openings and closings of the gun or of the control device. When the desired pressure has been reached, open and close the gun/control device a few times again in order to stabilize the various components (seals, springs, etc.). Check the pressure valve again and correct if necessary.

2.2.5 Screw down the nut (pos. 2) up to contact with the body.

2.2.6 In order to obtain working pressures lower than the maximum set pressure, unscrew the nut (pos. 1).

3. WARNINGS

3.1 The installation and the setting of the maximum pressure must be made by qualified staff only, who must have the required skills to handle high pressure systems and be informed of the operating and safety instructions contained in this manual.

3.2 The installer must provide the ultimate consumer with the proper instructions for the correct use of the system the valve is used in connection with.

GENERAL PUMP

INSTRUCTIONS FOR USE (CONT.)

3.3 Use soft and filtered water only. In case of salt water and/or of water containing solid particles of a size exceeding 360µm, the internal components of the valve will be subject to quick wear; furthermore, this might compromise the correct functioning of the valve. Addition agents can be used in the water, provided that they are biodegradable and always complying with the regulations in force in the country where the valve is used.

3.4 In the systems for hot water production, the temperature of the liquid that comes into contact with the valve must always be lower than the value stated in this instruction manual and/or indicated on the valve itself. **Avoid the formation of steam or overheated water.**

IMPORTANT: When the temperature of the liquid is close to the maximum value, the outside temperature of the valve body is only slightly lower. Therefore, take care in case of contact with the hot surface.

3.5 After use and/or before performing any operation on the system or on the valve, release the pressure by using the adjustment knob/screw and opening the gun or the control device for a few seconds. The jet created by the residual pressure must be directed downward in order to avoid damage or injury.

3.6 For safety reasons, it is advisable to equip the high pressure feeding line of the system also with a relief or safety valve duly adjusted.

3.7 To connect the valve to the system it is referable to use flexible hoses fitted in a way that they do not for 90^0 elbows, throttlings or siphons which could include harmful air bubbles. The inside diameters of the hoses and fittings must be equal to the correspondent inside diameters of the inlet, by-pass and outlet threads of the valve. Moreover, it is necessary to correctly choose the type of hose depending on the rated pressure and flow rate; the hoses must always be used within their operation limits as stated by the manufacturer and indicated on the hoses themselves.

3.8 Tighten the fittings as follows:
G1”-1/4 inlet fitting - torque wrench setting 221 Ft.lbs.(300 Nm)
G1”-1/4 bypass fitting - torque wrench setting 221 Ft.lbs.(330 Nm)

In order to ensure the seal, fit a metal washer with a rubber ring between the fittings, or use a proper sealant on the thread.

3.9 Always connect the valve by-pass fitting to a hose, in order to avoid the excessive noise caused by the water outflow through the by-pass without hose.

3.10 Before operating the system, it is advisable to start it for a preliminary test run in order to check that the system is properly installed.

4. MAINTENANCE

4.1 Maintenance and repair must be carried out by qualified and authorized staff only. Before any operation, make sure that the valve and the system are shut down and made unusable.

4.2 A correct maintenance helps extend the working life and grants a better performance of the valve.

4.3 From time to time, it is necessary to check that the valve is clean outside, and that there is no sign of leakage and/or malfunctioning. If necessary, replace the involved parts. In case of doubts, contact GP’s Customer Service Department.

4.4 Replace the valve parts with original spare parts only.

IMPORTANT: After maintenance, make sure that the valve is re-assembled correctly and that the initial conditions are restored. Comply with the torque wrench setting values and set the pressure again as described above.

4.5 The valve is entirely made of non-toxic and safe materials; however, in case of disposal, we suggest you do not dispose of it in the environment but take it to an authorized disposal center or contact the Customer Service Department.

The valve shall not be tampered with for any reason and/or used for any purpose other than the use it has been designed for. In case of tampering, the manufacturer disclaims all responsibility as to the valve functioning and safety.

5. WARRANTY CONDITIONS

5.1 The period and conditions of warranty are specified in the purchase contract.

5.2 Warranty is voided in case the valve is used for improper purposes, used at higher performances than the rated ones, repaired with non-original spare parts or if it turns out to be damaged due to the non-compliance with the operating instructions or to unauthorized tampering.

Ref 300805 Rev. D
06-11

GENERAL PUMP 1174 Northland Drive • Mendota Heights, MN 55120
Phone: 651.686.2199 • Fax: 800.535.1745 • e-mail: sales@gpcompanies.com • www.generalpump.com

GENERAL PUMP