ANNOVI REVERBERI
The Power of Experience

Model REVO 615 K

Version:
Serial number:
Code: **14310**

16/01/2018

230 V - 50 Hz | **schuko**

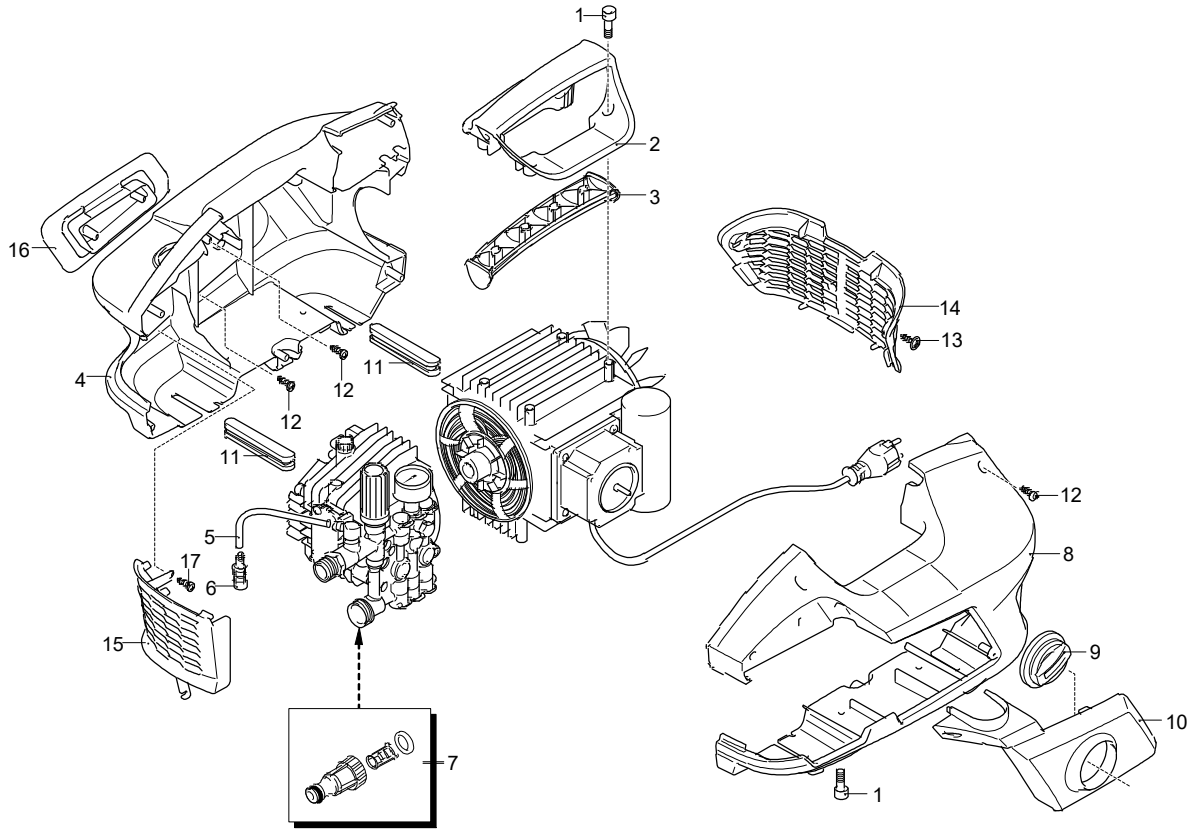

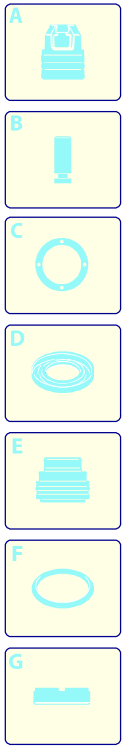

Validity	Pos.	Code	Description	Q
	1	880280	Screw	8
	2	1345341	Handle	1
	3	1345350	Cover	1
	4	1345283	Casing	1
	5	1270960	Detergent hose	1
	6	1341030	Filter	1
	7	3082130	Water coupling kit	1
	8	1345273	Casing	1
	9	1345420	Knob	1
	10	1345331	Guard	1
	11	4240540	Rubber foot	2
	12	2100300	Screw	10
	13	4240590	Screw	2
	14	1345311	Grille	1
	15	1345301	Grille	1
	16	1345291	Support	1
	17	1261570	Screw	1

UN_CE_1788-KQ

ANNOVI REVERBERI
The Power of Experience

Model REVO 615 K

Version:
Serial number:
Code: **14310**

16/01/2018

230 V - 50 Hz | **schuko**

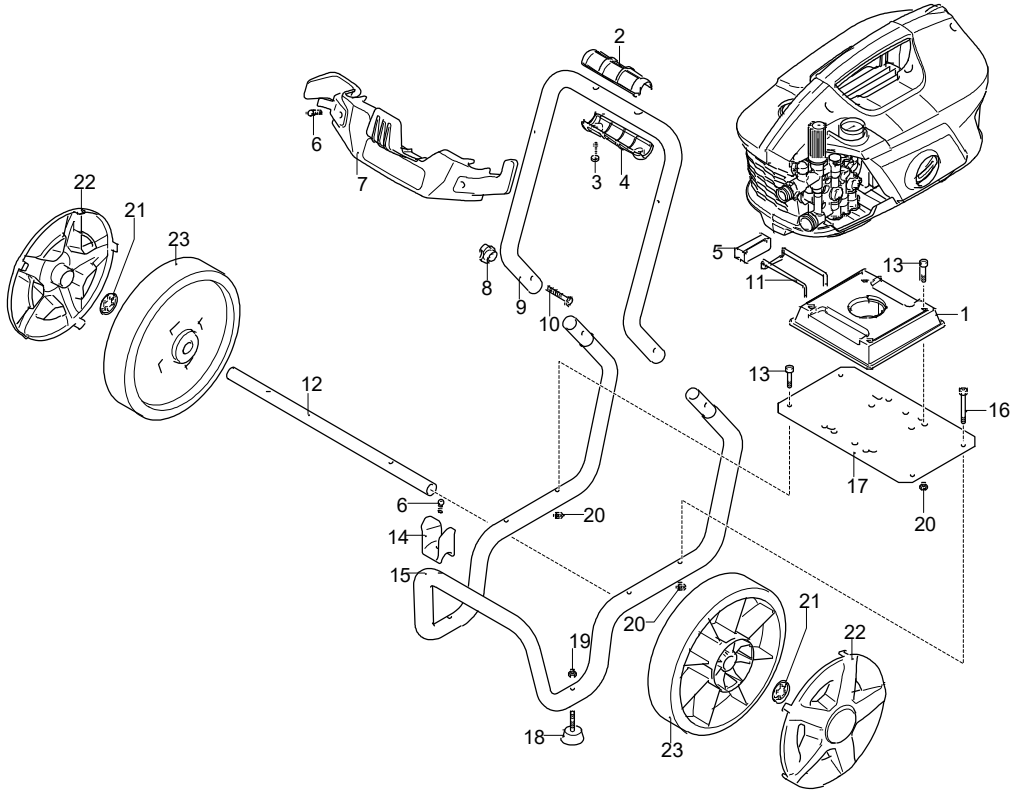

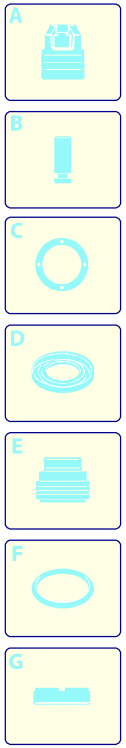

Validity	Pos.	Code	Description	Q
	1	1345370	Bracket	1
	2	3580180	Knob	1
	3	2100300	Screw	2
	4	3580090	Knob	1
	5	1345360	Push-button	1
	6	2060200	Screw	3
	7	4320050	Accessories carrier	1
	8	50019	Knob	2
	9	4320020	Frame	1
	10	50037	Screw	1
	11	1345470	Spring	1
	12	4320040	Pipe	1
	13	1345180	Screw	6
	14	3600070	Accessories carrier	1
	15	4320010	Frame	1
	16	2480310	Screw	2
	17	4320030	Plate	1
	18	4320220	Vibration damper	2
	19	3000170	Nut	2
	20	2480320	Nut	8
	21	380620	Washer	2
	22	4320270	Guard	2
	23	4320280	Wheel	2

UN_CE_1791-LQ

ANNOVI REVERBERI
The Power of Experience

Model REVO 615 K

Version:
Serial number:
Code: **14310**

16/01/2018

230 V - 50 Hz | **schuko**

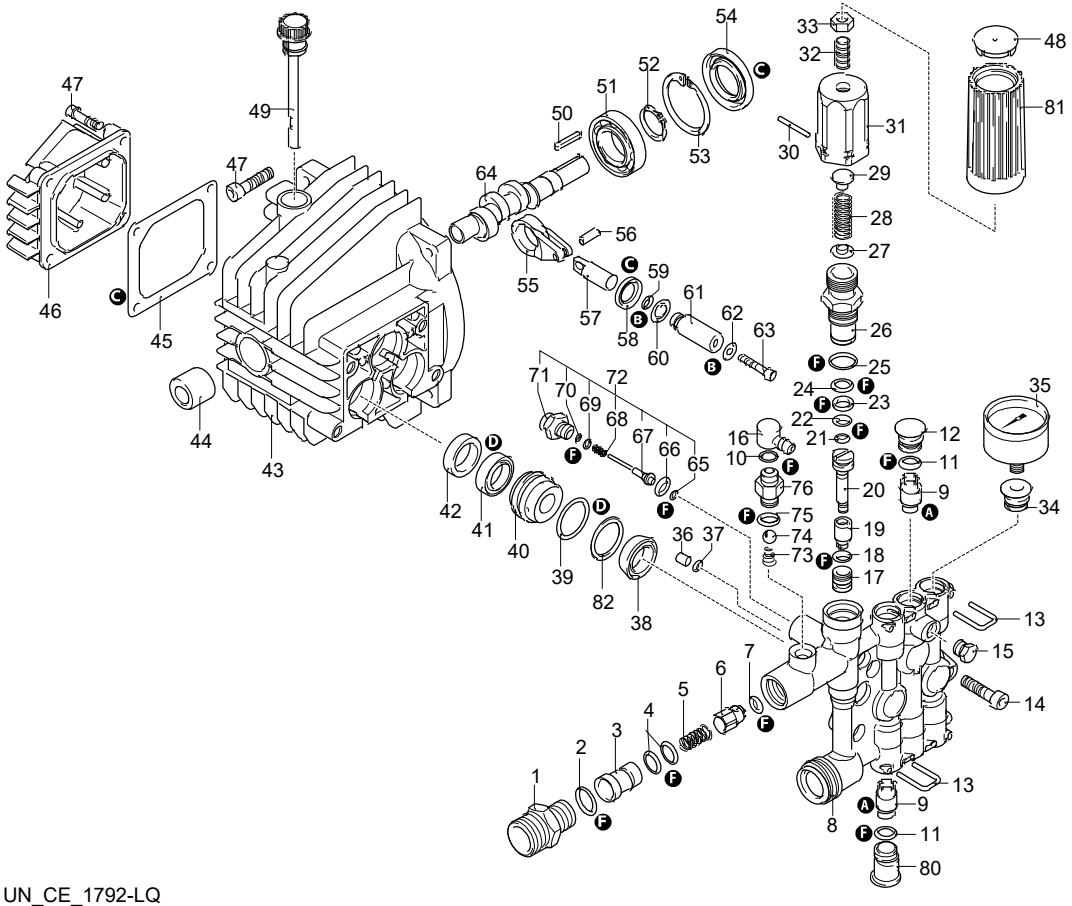

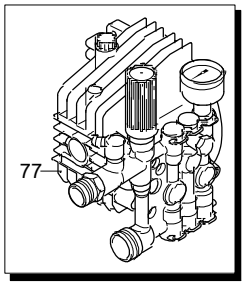

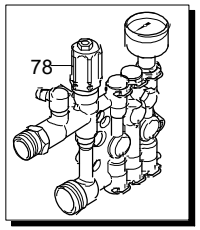

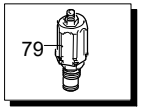

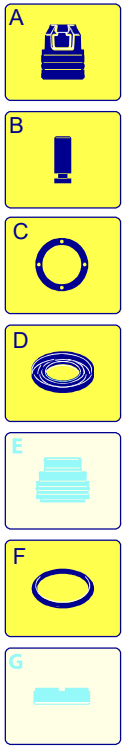

UN_CE_1792-LQ

Validity	Pos.	Code	Description	Q
	1	2900120	Fitting	1
	2	740290	O-ring	1
	3	2901060	Injector	1
	4	800560	O-ring	2
	5	3780450	Spring	1
	6	2901070	Shutter	1
	7	1460430	O-ring	1
	8	1345160	Head	1
	9	1349056	Valve	6
	10	480560	O-ring	1
	11	1465720	O-ring	6
	12	1344800	Plug	2
	13	1344790	Fork	6
	14	850850	Screw	4
	15	620301	Plug	1
	16	2320180	Hose tail	1
	17	1342701	Seat	1
	18	600180	O-ring	1
	19	1460151	Piston	1
	20	2021900	Piston	1
	21	1080190	O-ring	1
	22	600180	O-ring	1
	23	1080401	Ring	1
	24	820510	O-ring	1
	25	740290	O-ring	1
	26	1344870	Piston guide	1
	27	1343450	Wobble plate	1
	28	1460190	Spring	1
	29	1980220	Wobble plate	1
	30	1080070	Pin	1
	31	1344881	Insert	1
	32	1980470	Screw	1
	33	1060120	Nut	1
	34	1345020	Plug	1
	35	41851	Pressure gauge	1
	36	1344890	Plug	1
	37	2560870	O-ring	1
	38	3200690	Gasket	3
	39	770260	O-ring	3
	40	1345190	Piston guide	3
	41	1260440	Water seal	3
	42	1344760	Ring	3
	43	1344050	Pump body	1
	44	1345210	Bushing	1
	45	1040710	O-ring	1
	46	1344060	Cover	1
	47	1260780	Screw	8
	48	1981770	Plug	1
	49	1349000	Plug	1
	50	880111	Key	1
	51	1341070	Bearing	1
	52	480890	Ring	1
	53	111120	Ring	1
	54	1341080	Ring	1
	55	1340060	Connecting-rod	3
	56	1340080	Pin	3
	57	1340070	Piston	3
	58	1260460	Oil seal	3
	59	600180	O-ring	3
	60	1341010	Plate	3
	61	1342740	Piston	3

ANNOVI REVERBERI
The Power of Experience

Model REVO 615 K

Version:
Serial number:
Code: **14310**

16/01/2018

230 V - 50 Hz | **schuko**

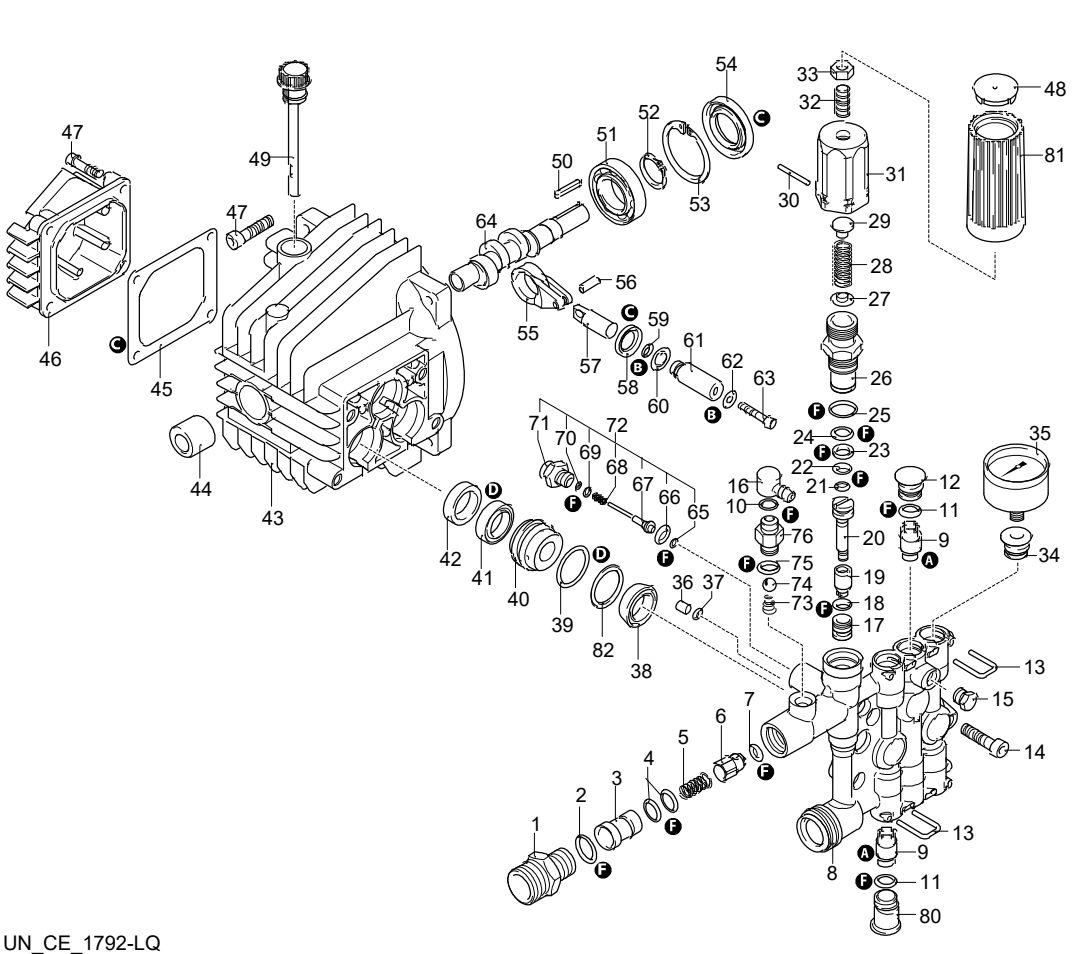

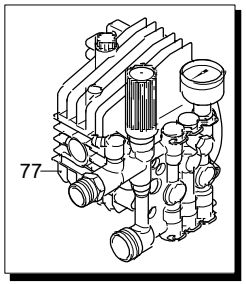

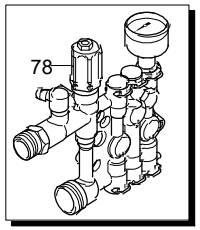

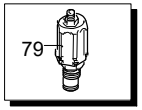

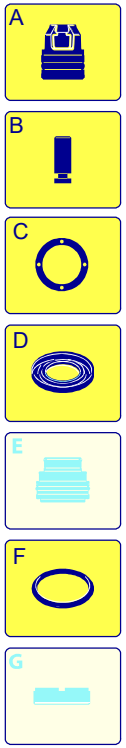

UN_CE_1792-LQ

Validity	Pos.	Code	Description	Q
	62	1341020	Washer	3
	63	850670	Screw	3
	64	1345700	Shaft	1
	65	1120680	O-ring	1
	66	600180	O-ring	1
	67	2022040	Pin	1
	68	2021630	Spring	1
	69	2021650	Washer	1
	70	1260820	O-ring	1
	71	1344830	Fitting	1
	72	42580	TSS Retrofit kit	1
	73	1560520	Spring	1
	74	1250280	Ball	1
	75	480480	O-ring	1
	76	1344620	Fitting	1
	77	1349532	Pump assembly	1
	78	1349132	Head assembly	1
	79	42690	Valve kit adjustment	1
	80	1345040	Plug	3
	81	1981780	Knob	1
	82	3200700	Ring	1
	A	42691	Valve kit	1
	B	2623	Piston kit	1
	C	42696	Oil seal kit	1
	D	43033	Water seal kit	1
	F	42697	Gasket kit O-ring	1

ANNOVI REVERBERI
The Power of Experience

Model REVO 615 K

Version:
Serial number:
Code: **14310**

16/01/2018

230 V - 50 Hz | **schuko**

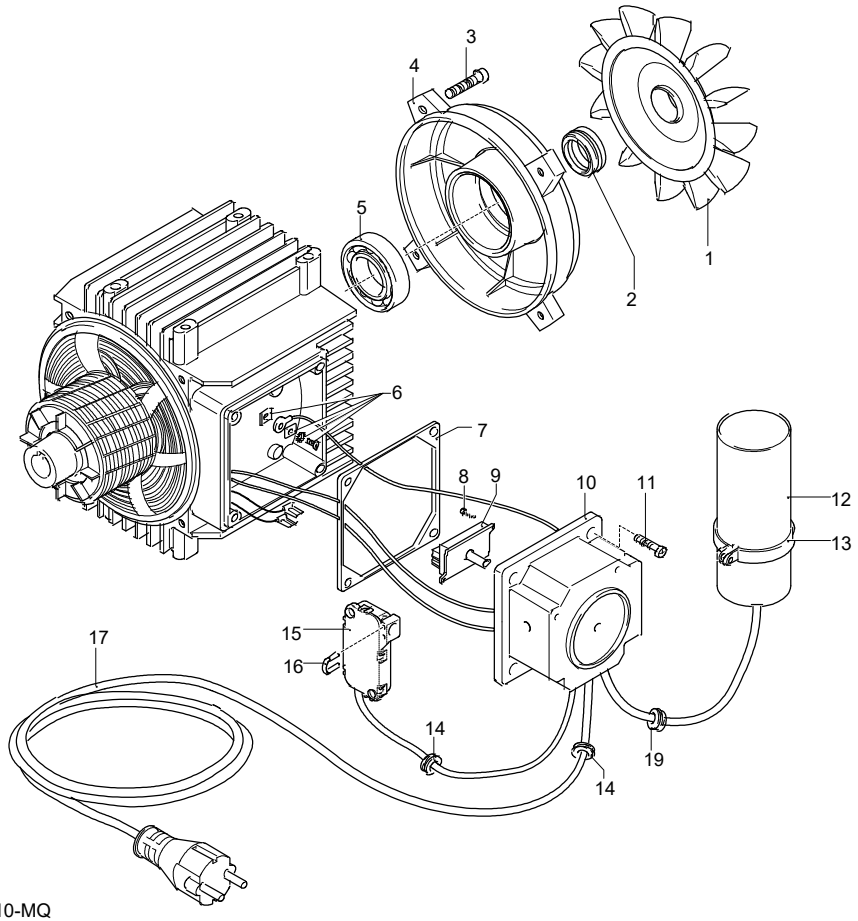

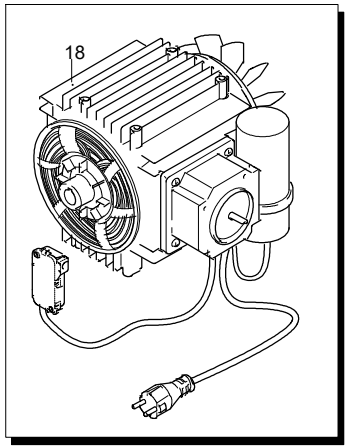

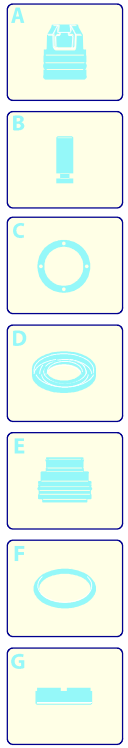

UN_CE_0910-MQ

Validity	Pos.	Code	Description	Q
	1	1260300	Fan	1
	2	1340350	Seal	1
	3	1345180	Screw	4
	4	1345140	Shield	1
	5	1340340	Bearing	1
	6	1269100	Clamp	1
	7	1340780	Gasket	1
	8	2000210	Screw	2
	9	2900420	Switch	1
	10	3780170	Box	1
	11	1261560	Screw	4
	12	1982190	Capacitor	1
	13	1982550	Clamp	1
	14	2021480	Gland	2
	15	2029752	TSS box assembly	1
	16	2022201	Fork	1
	17	4240690	Cable	1
	18	44722	Motor	1
	19	1462900	Gland	1

ANNOVI REVERBERI
The Power of Experience

Model REVO 615 K

Version:
Serial number:
Code: **14310**

16/01/2018

230 V - 50 Hz | **schuko**

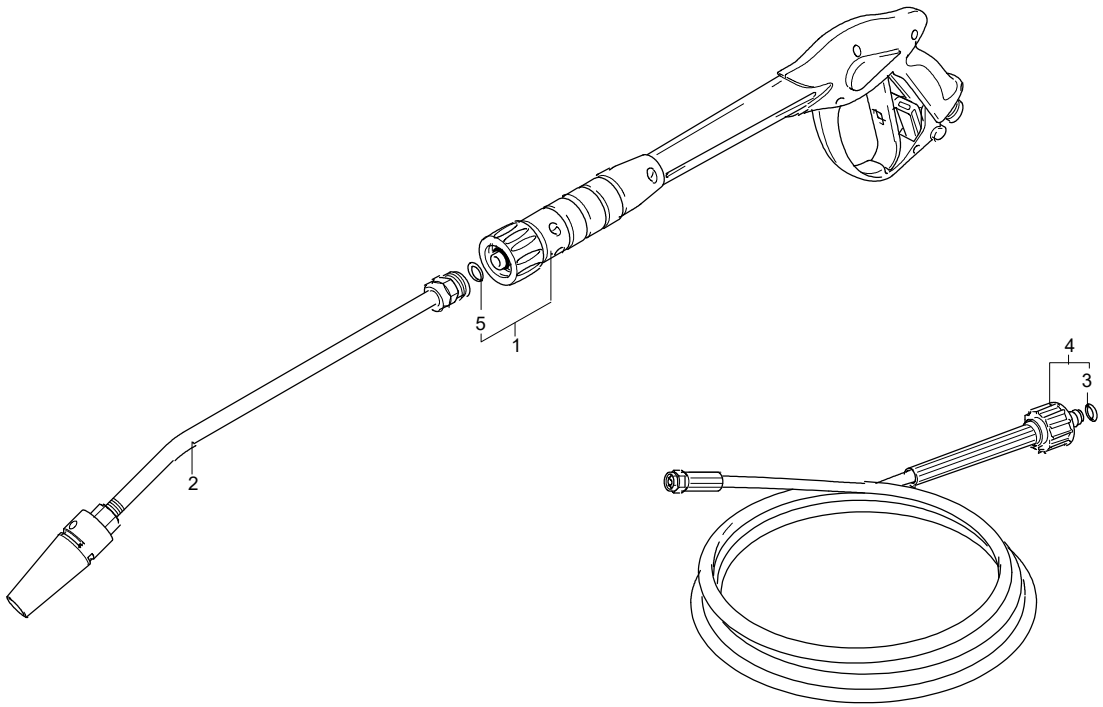

Validity	Pos.	Code	Description	Q
	1	40925	Gun	1
	2	41747	Lance+lance head	1
	3	2000770	O-ring	1
	4	3780491	High pressure hose	1
	5	391000	O-ring	1

UN_CE_0905-AT