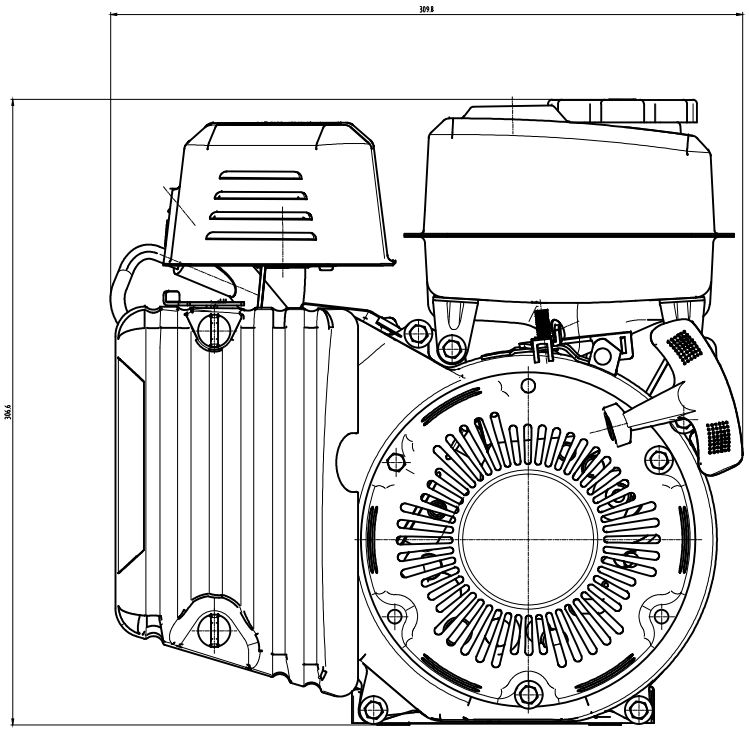
309.8
306.6

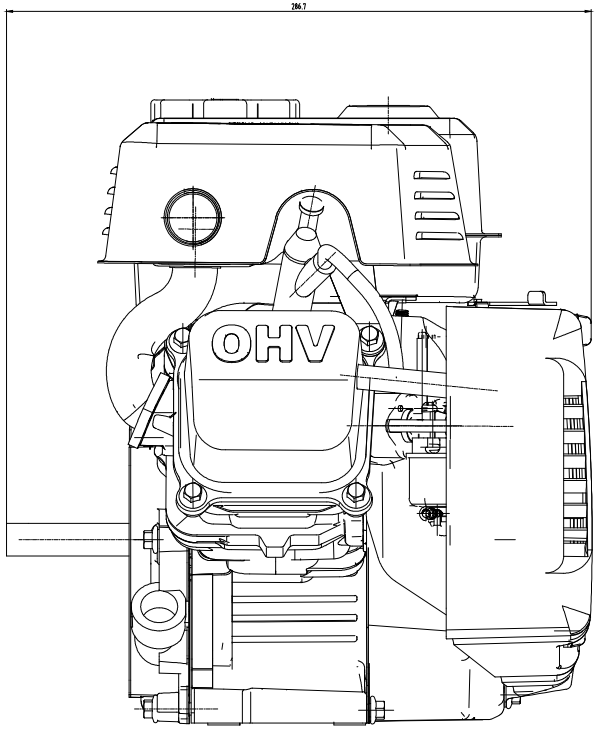
286.7
OHV

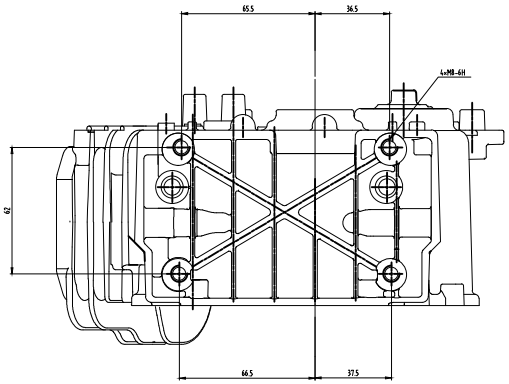
65.5
36.5
4xM8-6H
62
66.5
37.5

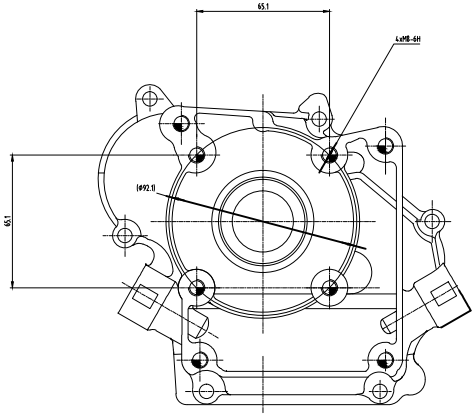
65.1
4xM8-6H
(φ92.1)
65.1

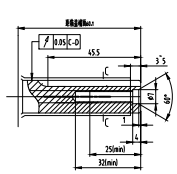
0.05 C-D
45.5
3.5
C
φ7
60°
C
1
4
25(min)
32(min)

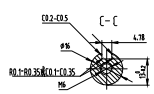
C0.2-C0.5
C-C
4.78
φ16
R0.1-R0.35
C0.1-C0.35
M6
13.4