FOR WACKER NEUSON

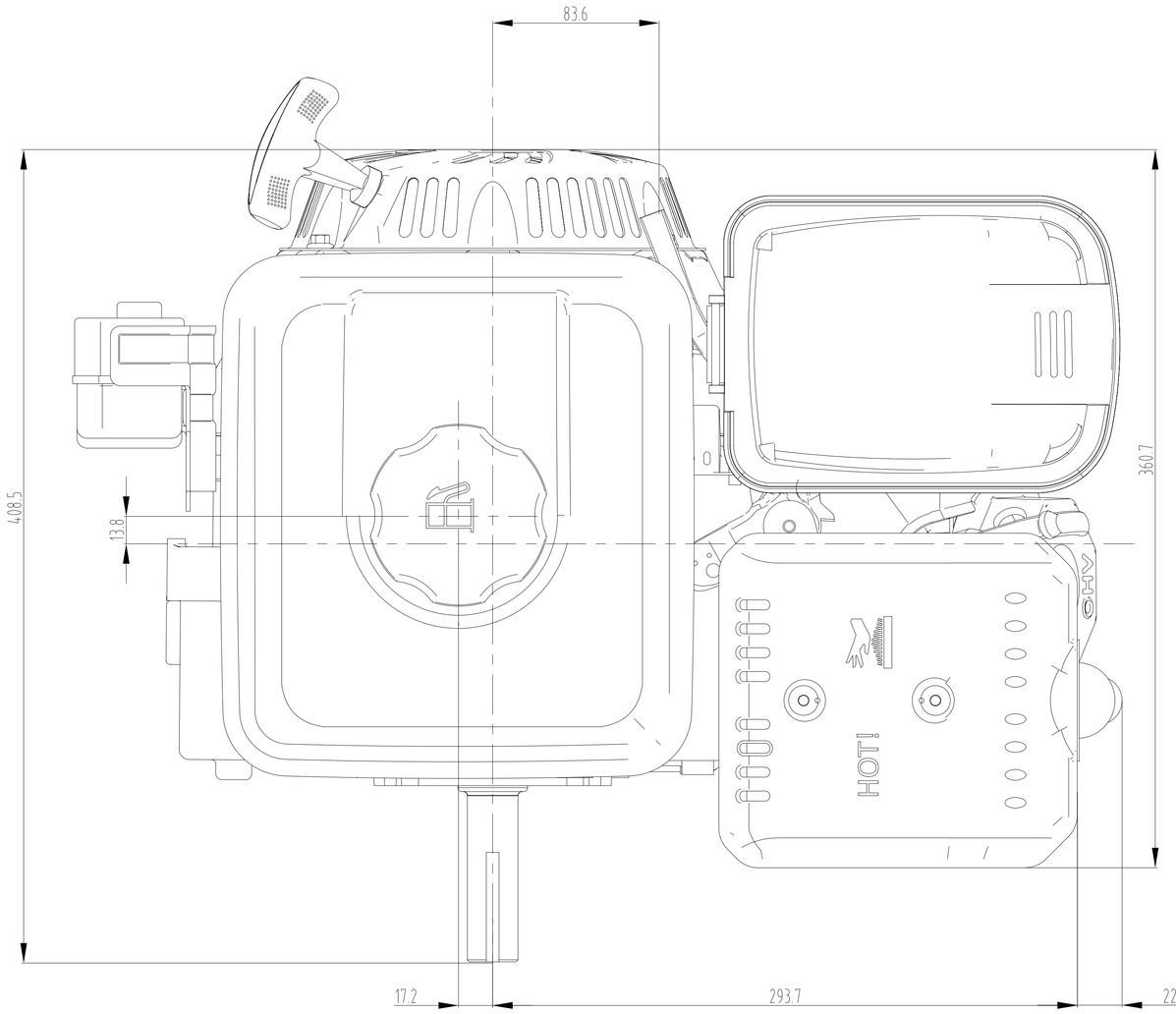

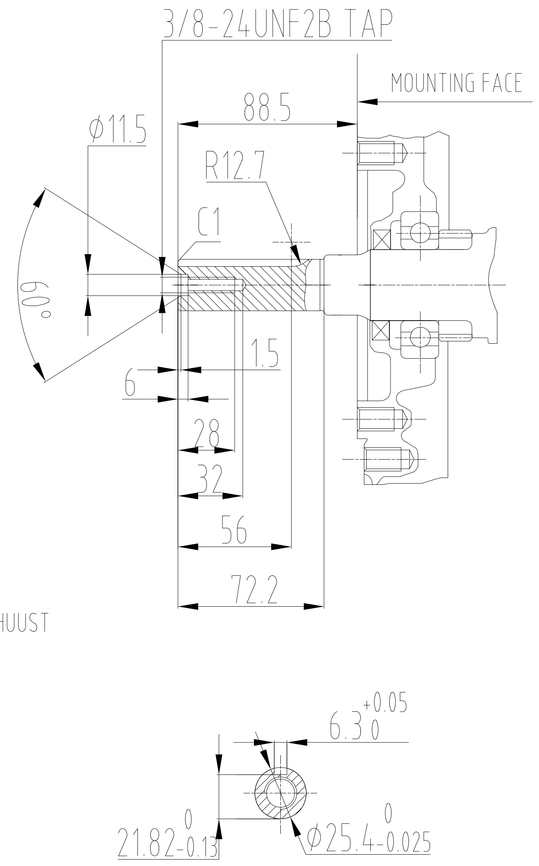

DIRECTION OF EXHUUST

Model	R 390
Engine type	Air cooled 4-stroke OHV petr ol engine, 25° inclined cylinder , horizontal shaft, cast iron sleeve
Bor e x stroke	1 – 90 x 66 mm
Displacement	420 cm 3
Compr ession ratio	7.9 : 1
Net power	8.6 kW / 3 600 rpm
Cont. rated power	6.85kW / 3 000 rpm 7.2 kW/ 3 600 rpm
Max. net tor que	25Nm / 2 500 rpm
Ignition system	Transistorised
Starting system	Recoil starter (electric start optional)
Fuel tank capacity	3.1 l
Fuel cons. at cont. rated power	1.7 L/hr – 3 600 rpm
Engine oil capacity	0.55 l
Dimensions (L x W x H)	453 x 413 x 444 mm
Dry weight	32.5 kg ± 1.5
High Speed	3 600 rpm
Low Speed	1 800 rpm ±100
Lubricant	Automobile engine oil
	SAE #20 ~ #30 or 10W – 30
	API service class SE or higher grade

R420 PERFORMANCE CURVES

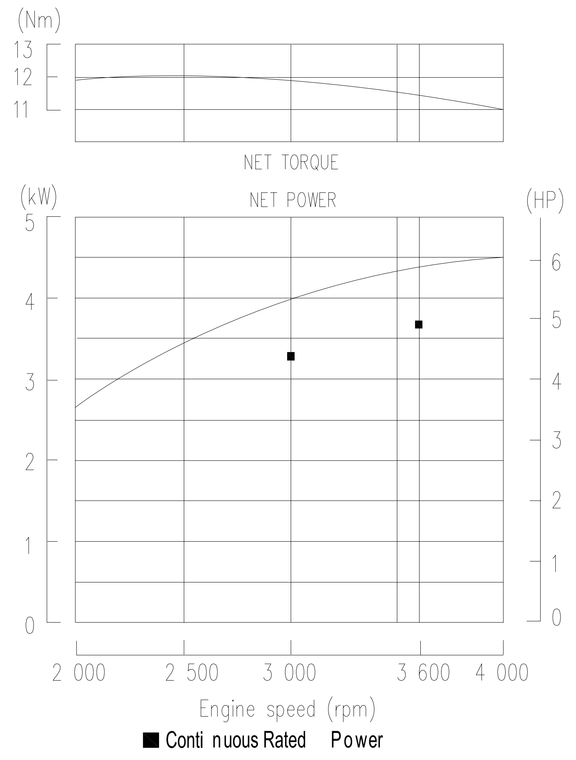

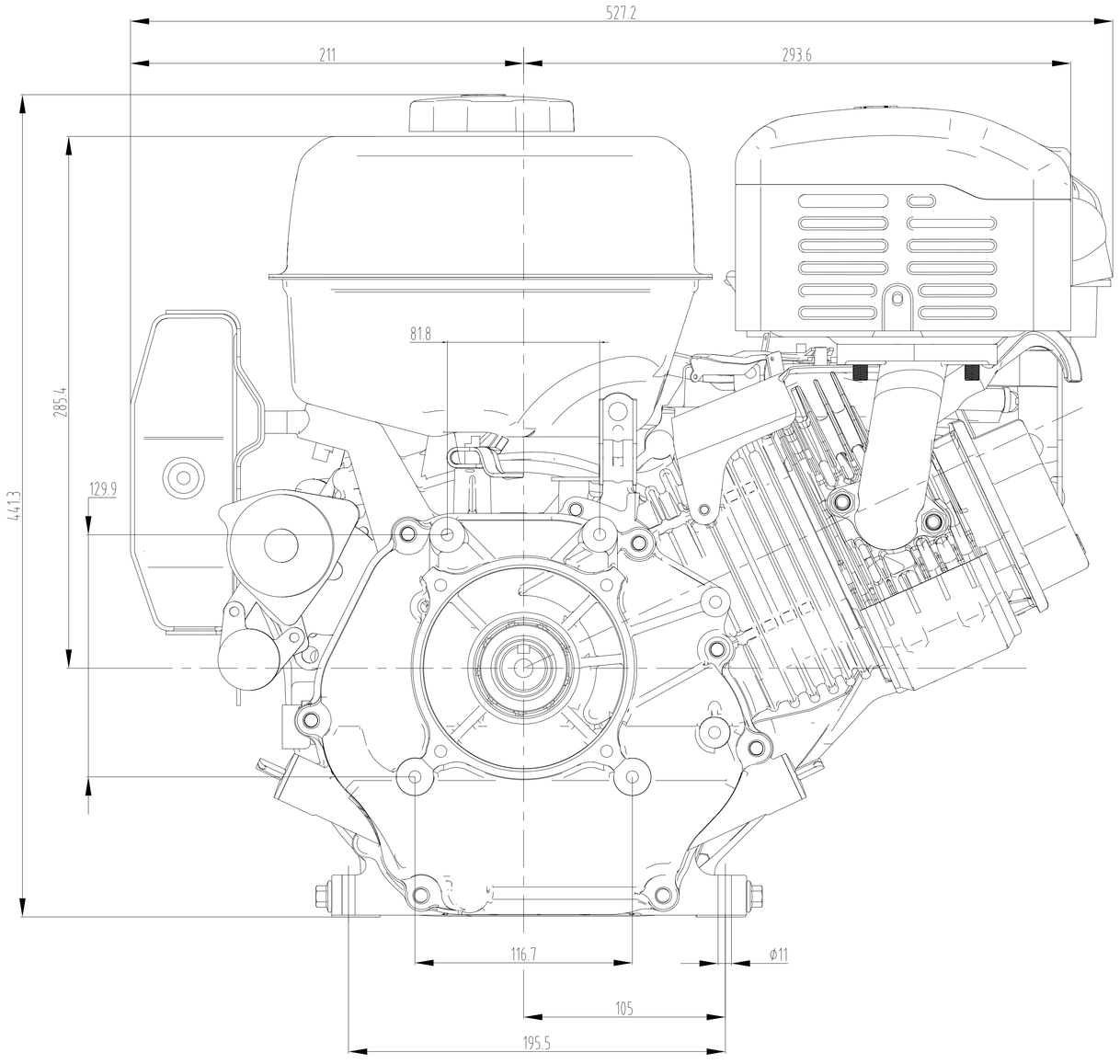

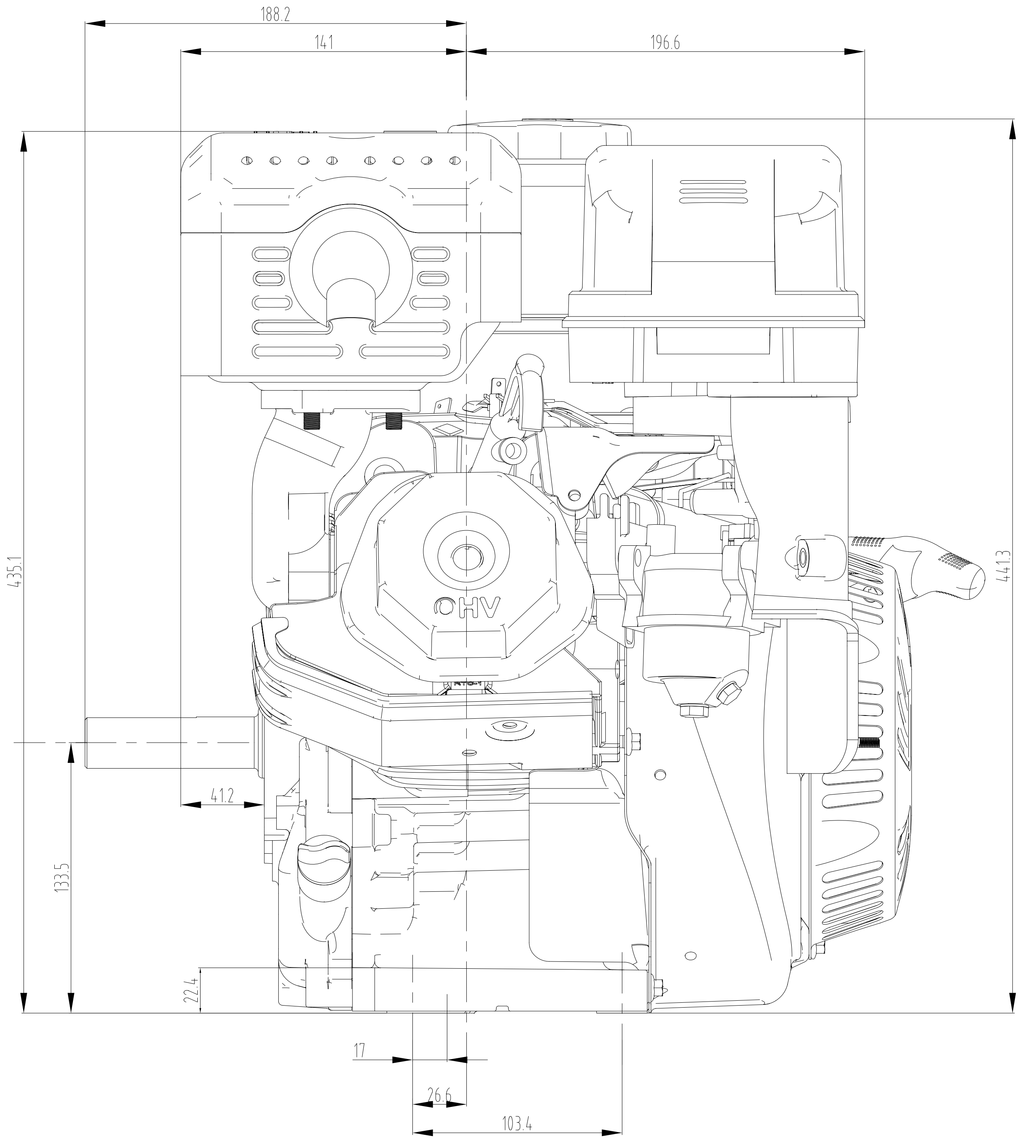

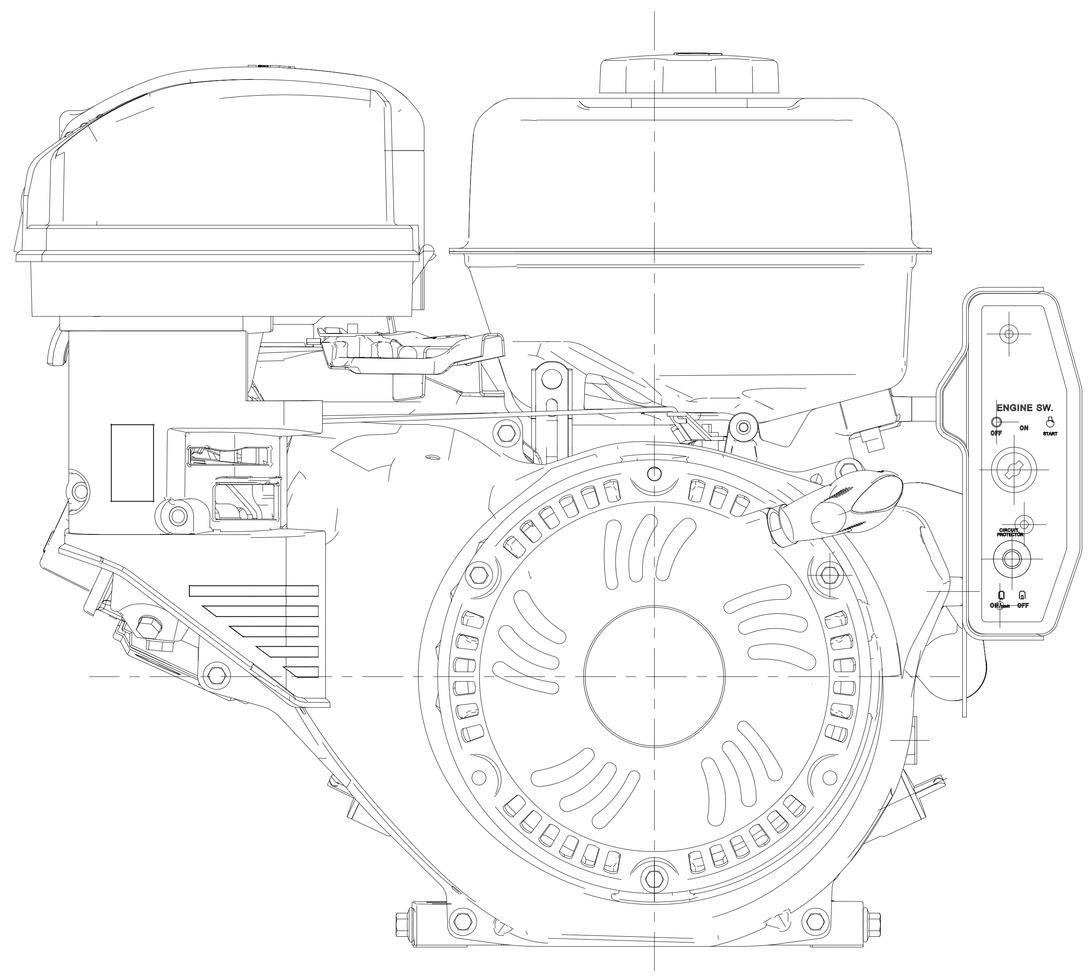

标记 Mark	处数 Places	分区 Area	更改文件号 Change Order No.		签名 Signature	年月日 Date	
会签 Counter Sign							
设计 Design			工艺 Technics				
审核 Check			标准化 Standard				
审定 Audit			批准 Approve				

更改标记 Mark/S.A/El		版本 Version	页数 Pages	总张 Sum
L	A	B		11
共 1 张 Total Pages			第 1 张 Current Page	

RATO 重庆润通动力制造有限公司

R420D