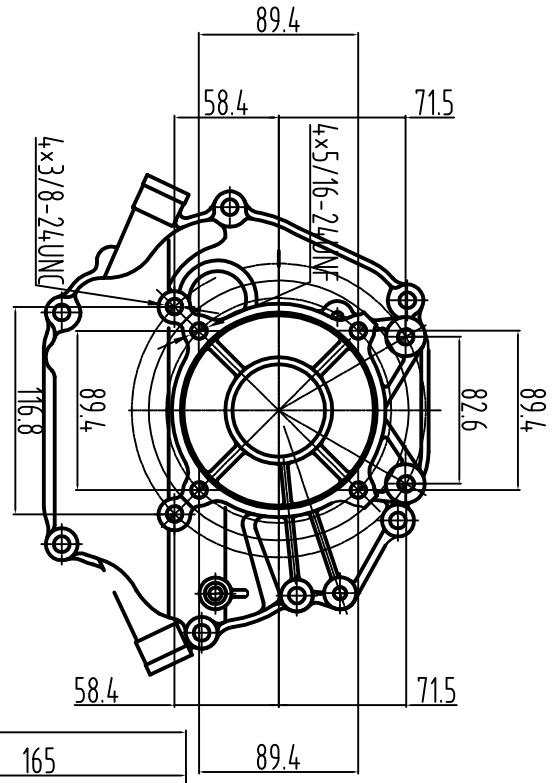
89.4
58.4
71.5
4x3/8-24UNC
4x5/16-24UNF
116.8
89.4
82.6
89.4
58.4
71.5
89.4

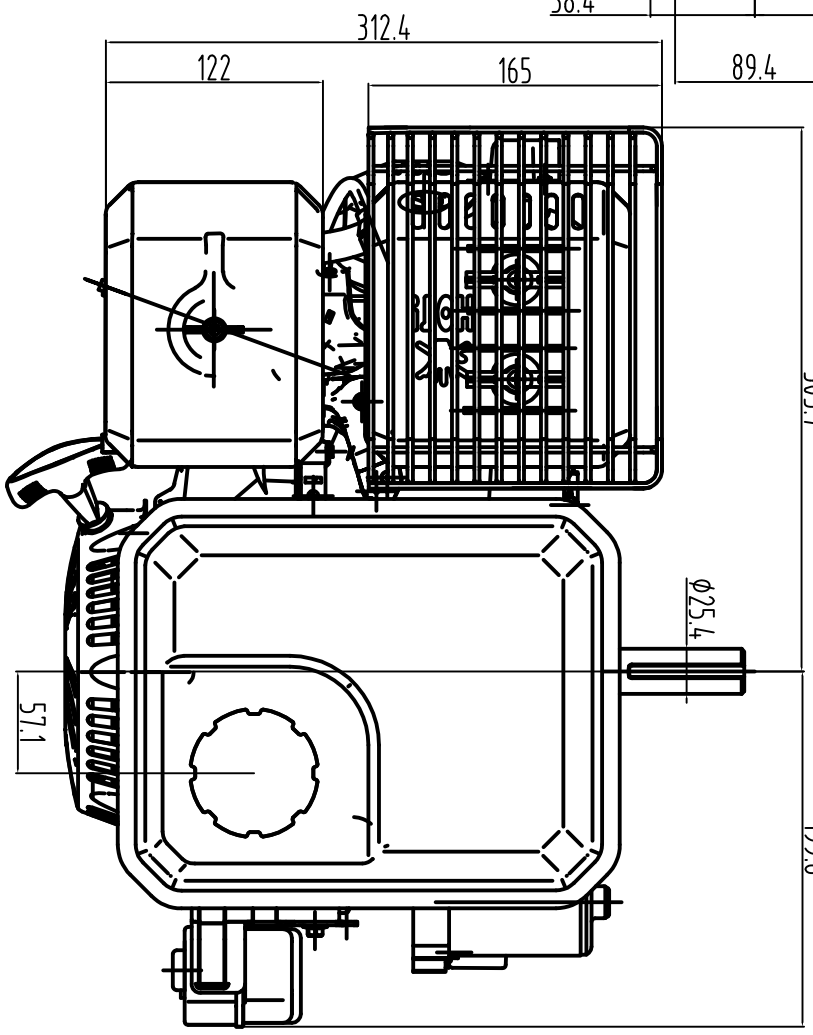
312.4
122
165
305.7
Ø25.4
57.1
199.6

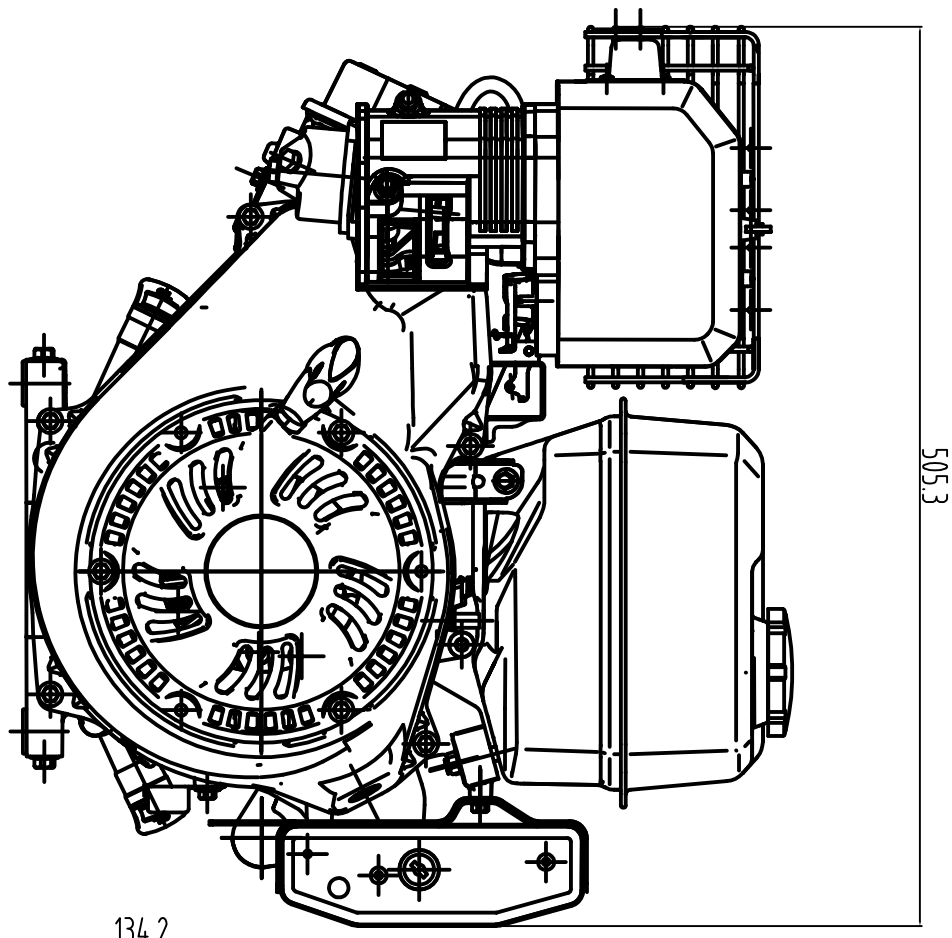
505.3

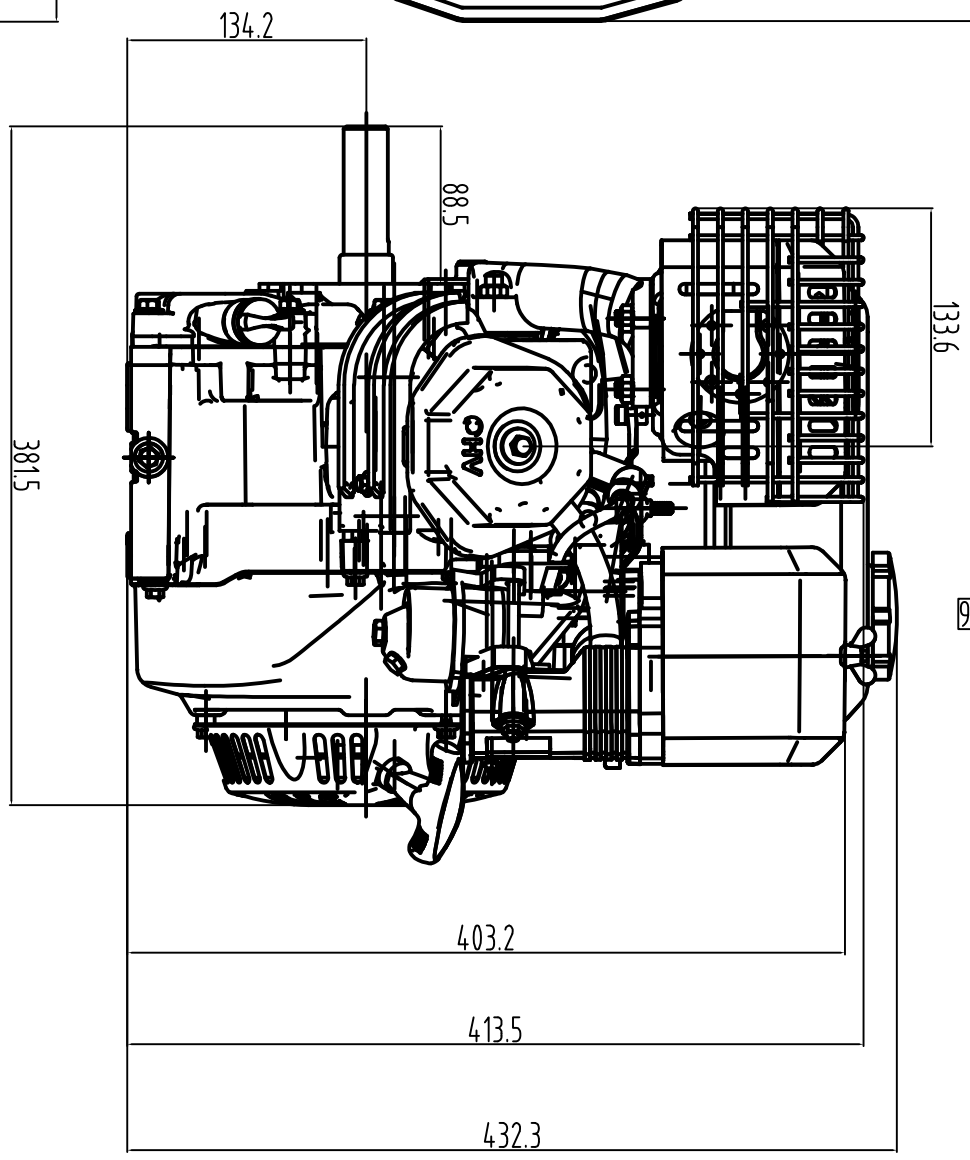
134.2
88.5
133.6
381.5
403.2
413.5
432.3

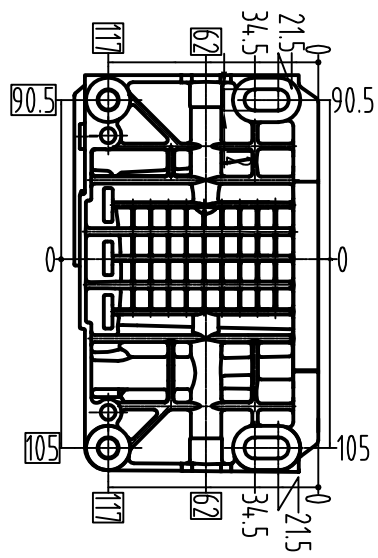
21.5
34.5
117
62
90.5
90.5
105
105
62
34.5
21.5
117
