YOU CAN DEPEND ON
DAVEY



Model Numbers:
DPCOVER-S-BG, DPCOVER-S-MG,
DPCOVER-S-LG, DPCOVER-S-BK

APPLICATIONS

Ideal for protecting your pump investment from the elements. To suit a range of Home Pressure Systems, Commercial Pumps and Swimming Pool Pumps.

DAVEY

PumpCovers

PROTECTIVE PUMP COVERS

FEATURES & BENEFITS

WEATHER PROTECTION FOR PUMPS

- UV Resistant with 20 Year warranty
- Large enough to keep the pump operating cool, large vents on both sides to allow for ample unrestricted air flow
- Supplied as cover and base + two fixing screws
- Four colours to select from - Mist Green (DPCOVER-S-MG) , Light Grey (DPCOVER-S-LG), Beige (DPCOVER-S-BG) and Black (DPCOVER-S-BK).

SUITS

- **HPS Systems** - DynaDrive, HP, HS, HM, XJ and XP Series, TotalFlo Series, Azure Series, Garden Series
- **Commercial Pumps** (limited range as listed) - VM1-11, VM3-9, VM5-6, VM10-3, CD's, CS up to CS40160-4.03
- **Pool Pumps** - Silensor SLS & SLL, StarFlo, Whisper

Davey Pump Covers

DAVEY

DIMENSIONS (mm)

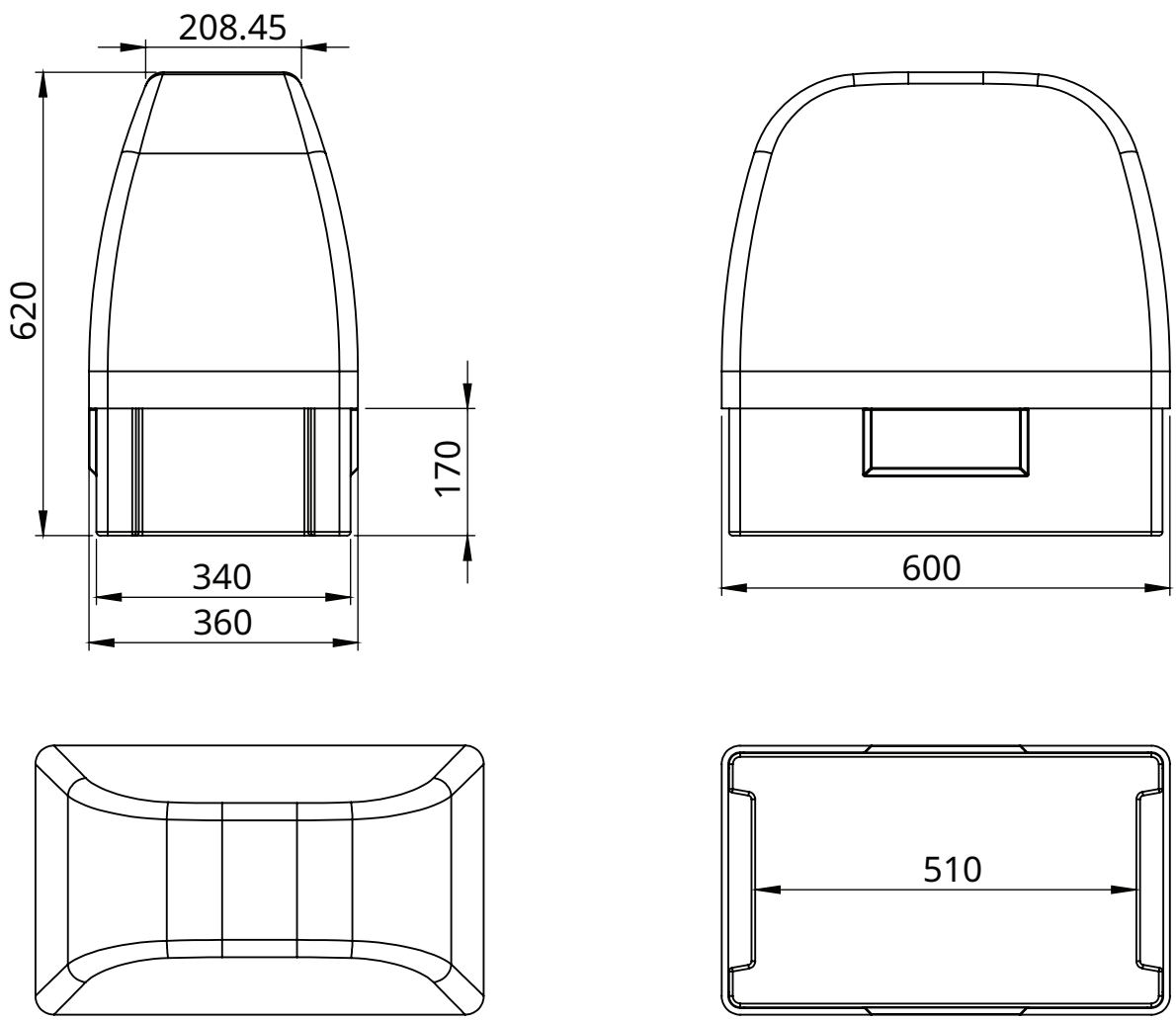

H/O & MFG SCORESBY
Certified System Quality ISO 9001
Certified System Environment ISO 14001

daveywater.com

This literature is not a complete guide to product usage. All images provided in this document are for illustration purposes only. Further information is available from your Davey Dealer, Davey Support Centre and from the relevant product Installation and Operating Instructions. Must be read in conjunction with the relevant product Installation and Operating Instructions and all applicable statutory requirements. Product specifications may change without notice.
® Davey is a registered trademark of Davey Water Products Pty Ltd. © Davey Water Products Pty Ltd 2026.

DAVEY

DWP2320-2/0625