DAVEY

Prime Jet 240
Pumps And Pressure Systems

Installation and Operating Instructions

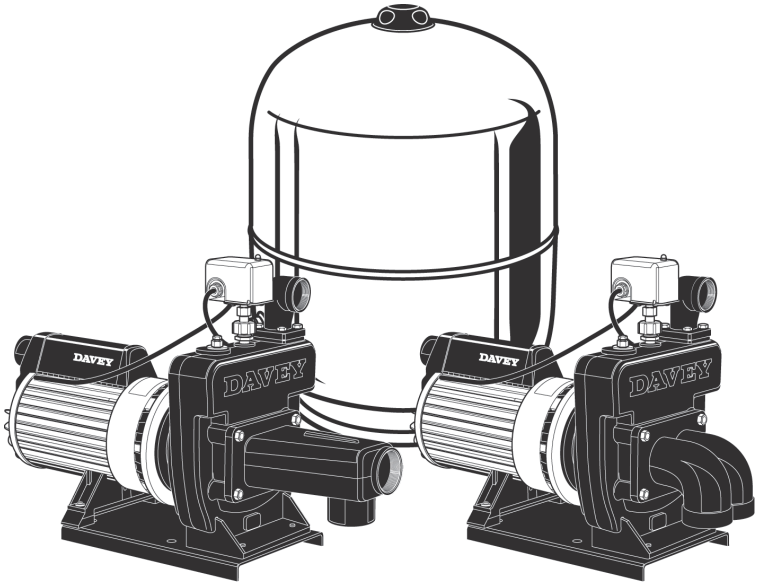

Read All Instructions Before Installing Your New Prime Jet

These instructions have been prepared to acquaint you with the correct method of installing and operating your **Prime Jet Pressure System.** We urge you to study this publication carefully and follow its recommendations. If you have any installation difficulties or need further advice you should contact the Davey dealer from whom you purchased the system or the Davey Customer Service Centre.

Please pass these instructions on to the owner of this equipment.

Prior to using this pump you must ensure that:

- The pump is installed in a safe and dry environment
- The pump enclosure has adequate drainage in the event of leakage
- Any transport plugs are removed
- The pipe-work is correctly sealed and supported
- The pump is primed correctly
- The power supply is correctly connected
- All steps have been taken for safe operation

Appropriate details for all of these items are contained in the following Installation and Operating Instructions. Read these in their entirety before switching on this pump. If you are uncertain as to any of these Installation and Operating Instructions please contact your Davey dealer or the appropriate Davey office as listed on the back of this document.

INTRODUCTION

Davey Prime Jet Pumps and Water Pressure Systems have been designed to operate with one of two alternative suction arrangements, these are:–

Shallow Well Injector for surface water or shallow wells up to 7.5m (25ft) deep

OR

Deep Well Injector for bore holes and/or deep wells up to 50m (164ft) deep.

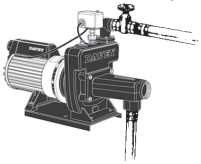

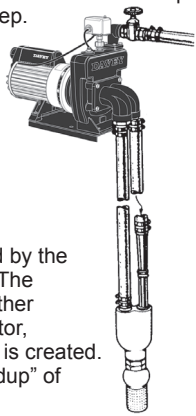

The use of this product to pump flammable, corrosive and other materials of a hazardous nature is specifically excluded.

HOUSING YOUR PRIME JET

To avoid damage to your Prime Jet pump or system which may not be covered by the guarantee, ensure adequate protection from external atmospheric conditions. The housing of the product should protect against freezing, rain, extreme heat or other adverse weather conditions. Adequate ventilation must be provided for the motor, however, do not enclose the pump in such a manner that a “hot box” condition is created. Ventilation should be provided near the top of any enclosure to prevent a “buildup” of condensation.

NOTE: For protection, the Davey pump motor is fitted with an automatic “over temperature” motor protection cut-out. Constant tripping of this overload device indicates a problem eg. low voltage at pump, excessive temperature (above 45°C) in pump housing / enclosure.

Your Prime Jet should be mounted on a firm base high enough to prevent any surface water that may accumulate from coming into contact with the unit. Positioning of the unit should allow the nameplate to be easily read and adequate access for service purposes. Install so that any water which, over time, leaks from pipe connections or pump seals can drain away without damaging surrounds.

NOTE: Pipes should be sealed correctly so that they do not leak. Seals should not visibly leak - visible leaks may indicate seal failure. Contact your Davey Dealer.

The power outlet may need to be provided by an electrician in a safe, dry place (possibly within the weather proof enclosure). Prime Jet 240 1 phase, 220/250 units require a special 15 amp power outlet.

INSTALLING A PRIME JET FOR SHALLOW WELL APPLICATIONS
(Where Total Suction Head is Less Than 7.5 Metres (25 ft.)

The Shallow Well Jet Kit is supplied separate from the pump or pressure system and includes a rubber gasket. Place this rubber gasket over the 4 studs on the pump. Fit the jet assembly over the studs on the pump and secure with the nuts and washers provided. Tighten nuts sufficiently to prevent air leaks around the gasket but do not over tighten.

Suction Piping

Polythene pipe is recommended for the pump suction as it provides flexibility, reduces the transmission of pump noises and provides a convenient method of disconnecting the pump without unions or the need to cut into the piping. For best performance situate the pump as close to the water source as practical. To reduce pipe friction and maximise flow we recommend the following Suction Pipe Sizes for the lengths indicated.

Suction Port size $1^1/_2$" BSP

Suction Length	up to 10m	10m to 30m
Pipe size	40mm ($1^1/_2$")	50mm (2")

Use thread seal tape or pipe compound on all threaded pipe fittings or connections and ensure they are leak free.

NOTE: Suction leaks are the biggest cause of operating difficulties and are hard to detect because the problem is air leaking into the pipe and there may be no external sign of the leak.

Suction piping should be laid so there is a constant rise from the water source to the pump. Any high spots will cause air pockets to form and reduce the efficiency of the system as well as creating priming difficulties.

Plumbing Details for 'Shallow Well' Installations

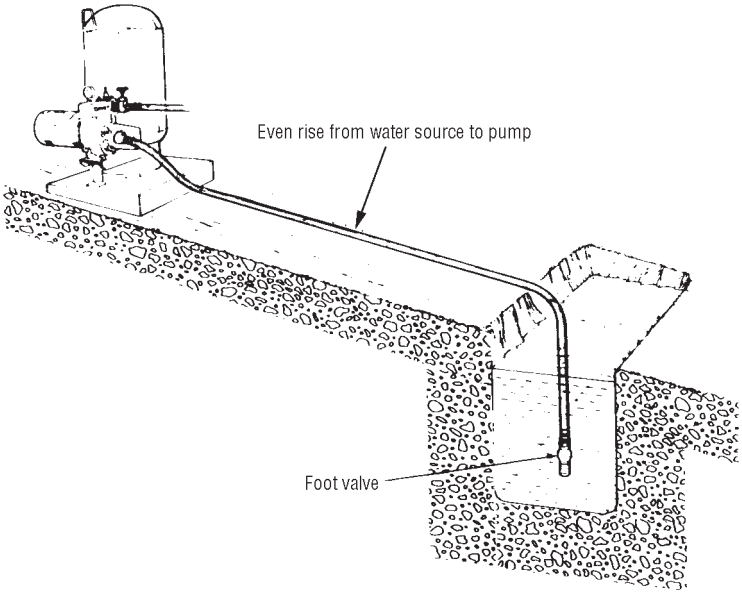

For Automatic Pressure System Installation.

A foot valve must be used on the end of the suction pipe for below ground installations or a check valve in the suction line for above ground water sources (ie. tanks). For optimum pump operation and priming ensure that the suction line is level or rises evenly from the water source to the pump.

INSTALLING A PRIME JET FOR 'DEEP WELL' APPLICATIONS (Total Suction Head over 7.5m or 25 ft) with Deep Well Injector Kit.

The Deep Well Injector Kit comprises a bronze injector and foot valve assembly which is to be attached to the end of polythene piping and lowered into the water. An adaptor flange (or bend) to connect the suction pipes to the pump is also included in the kit, together with a rubber gasket and 2 polythene connectors and 8 stainless steel hose clips.

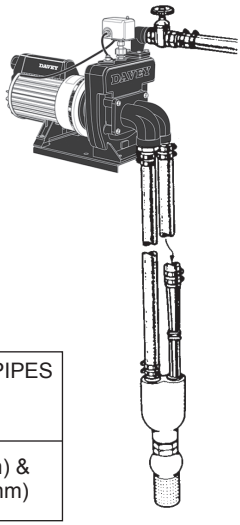

(A) Piping for use on Deep Well Injectors

All Deep Well Injectors require two pipes to be connected. Pipe sizes are according to Table below (except where special sizes may be specified for a particular installation).

DEEP WELL INJECTOR KIT 100mm (4")	SUCTION PIPES I.D.
427 & 428	$1^1/_2$" (38mm) & $1^1/_4$" (32mm)

DEEP WELL INJECTOR KIT 125mm (5")	SUCTION PIPES I.D.
565, 567, 568 569	2" (50mm) & $1^1/_2$" (38mm)

NOTE: Injector fittings are sized for imperial pipe.

Polythene piping which complies with the relevant Australian Standard should be used. Select the grade of pipe which has a pressure rating of 90m head (300 ft.) for use on depths over 12 metres (40 ft.). For depths up to 12 metres (40 ft.) polythene pipe with a pressure rating of 60m head (200 ft.) may be used.

For "Offset" installations involving long runs of pipes to the deepwell injector, larger sized pipes will be required to minimize resistance to flow and enable pump performance to be achieved. Consult your Davey Pump Dealer or the Davey Customer Service Centre for recommendations.

INSTALLATION OF AUTOMATIC DEMAND RESPONSE (ADR) VALVE

The ADR is a device to maintain Minimum Operating Pressure (MOP), to prevent loss of prime damage to the pump system as well as it can be used to limit flow from the pump to match a limited yield bore flow capacity.

Prime Jet 240 Deep Well Injector kits include an ADR which should be installed directly to the outlet bend (4 bolt flange x 1 ¼" BSP(f) 90° bend). The ADR 1 ¼" BSP(m) thread connects to the elbow – use thread tape.

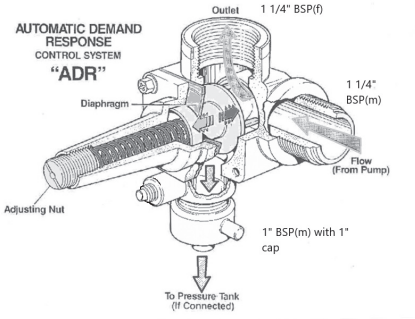

The ADR should be tightened to ensure the adjustment screw faces horizontally and has free access for adjustment by a large screwdriver.

A pressure tank can be connected via pressure hose to the bottom facing outlet on the ADR or can be installed downstream of the outlet.

Prior to connecting the outlet pipes to the rest of the system delivery pipework a gate valve must be installed after the ADR. The gate valve is to enable correct ADR adjustment on set-up. The outlet must only be able to discharge water through the gate valve and the gate valve must be able to freely discharge water to atmosphere when opened. Discharge from this gate valve MUST NOT be restricted by any other valve or plumbing for correct set-up.

Discharge plumbing order is:

Pump → Outlet Bend → ADR → gate valve → atmosphere/waste

(B) Plumbing Details for Deep Well Injectors.

A minimum submergence of 3m (10 ft.) is required for the injector and foot valve assembly for correct operation.

When water is pumped out from a borehole it is common for the water level in the bore to drop. However, there is usually a point at which the bore water level remains static or constant for a given maximum flow from the bore. This new level is known as the draw down level of the bore. It is necessary to establish this draw down level and the output capacity of the bore at this level before installing a pump on the bore.

Once the pump has been installed on the bore it is necessary to regulate the flow from the pump to ensure it does not exceed the maximum capacity of the bore at the draw down level. (Refer to Operating Instructions included with Deep Well injectors).

The minimum submergence of the injector and foot valve assembly of 3 metres (10 ft.) means the length of piping required from top of bore to injector assembly is equal to the draw down level plus 3 metres (10 ft.).

Furthermore, ensure that at least 2 metres (6 ft.) clearance exists between the injector assembly and the bottom of the bore.

Having established the length of the piping required for attachment to the injector, connect the injector assembly making sure that the larger pipe is fitted to the long venturi tube of the injector. Use 2 hose clips on each pipe connection and tighten securely. It may be necessary to heat the polythene piping slightly before pushing it on to the hose tails. At the other end of the suction pipes (top of bore end) fit the adaptor flange to the piping using the hose tail connectors provided loose in the injector kit.

Ensure joints are air tight, thread seal tape or pipe joining compound is recommended. Securely tighten 2 hose clips on each connector.

It is essential that there be no air leaks at this connection particularly because air leaks are the biggest cause of suction and priming difficulties. Air being sucked in is almost impossible to detect. Ensure that both pipes are of even length and will lie straight side by side before installing in the bore hole.

Lower injector assembly into bore hole and attach adaptor flange to pump using the rubber gasket provided. Tighten the nuts sufficiently to prevent air leaks around the gasket but do not over-tighten.

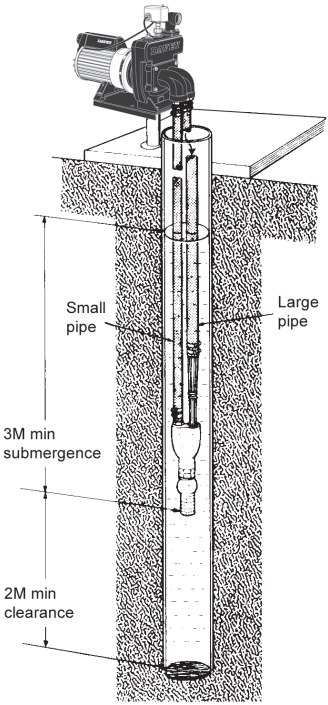

DELIVERY PIPING FOR SHALLOW OR DEEP WELL APPLICATIONS

It is recommended that a gate valve be fitted at the outlet of the pump. Pipe connection fittings which allow convenient disconnection at a future time should be used. Polythene piping which complies with the relevant Australian standard is recommended. However, select the grade of pipe which has a pressure rating suitable for your application. Galvanised or PVC piping may also be used providing the pressure rating is adequate.

The pressure delivered by your Prime Jet is reduced by the static delivery head (vertical height from pump to outlet point) plus the friction loss caused by the piping itself. Static delivery head reduces the available pressure from the pump by 10kPa (2psi) for every 1 metre (3.3 ft) of head. The reduction in pressure due to pipe friction varies with the length, diameter and type of piping used. The larger the diameter pipe the smaller the pressure drop.

The following pipe sizes are recommended for lengths up to 100m (330 ft).

MODEL	Outlet Port Size	Up to 5mm (15")	Up to 30M (100')	Up to 100M (330')
Prime Jet 240	30mm ($1^1/_4$")	30mm ($1^1/_4$")	40mm ($1^1/_2$")	50mm (2")

POWER CONNECTION

Single phase Prime Jet 240 units are supplied with a special 15 amp power plug which may only be used with a 15 amp 220/ 250V power outlet (usually specially provided by an electrician). Single phase Prime Jet 240 units may also be wired to a nominal 480V power supply, but must be reconnected at the terminals under the terminal cover (refer Figure One on pg 7).

In addition, the overload fitted to the pump, is suitable for 240V only. 480V overload is supplied in the bag in-which these instructions were supplied. All this electrical work must be carried out by a suitably qualified electrician.

WIRING CONNECTIONS FOR SINGLE PHASE MOTORS

Single phase units should be restricted to no more than 20 starts per hour.

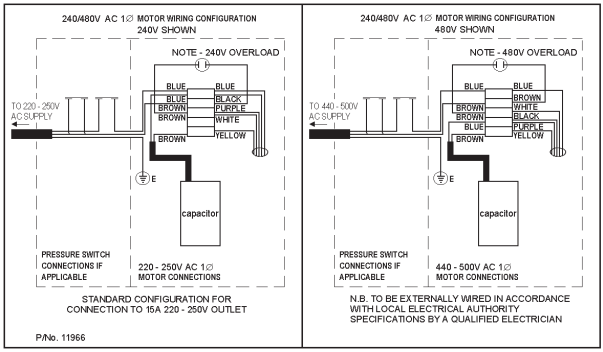

WIRING CONNECTIONS FOR THREE PHASE MOTORS

Prime Jet 240 units for connection to a nominal 415 Volt 3 phase supply must be wired with a contactor which has quick trip (M10) rated overloads set at nameplate current. All electrical connection work must be carried out by a suitable, qualified electrician.

In accordance with AS/NZS 60335.2.41 we are obliged to inform you that this pump is not to be used by children or infirm persons and must not be used as a toy by children.

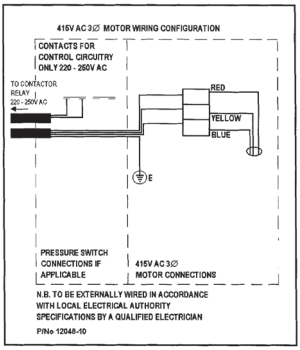

Davey recommend the use of overloads which also have the ability to detect “single phasing” or “dropped phase” conditions in the power supply.

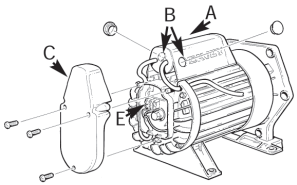

Figure One

Three phase Prime Jet 240 models have been designed to allow for connection either side of the Capacitor Cover (marked “A” in figure one) on the motor. (NOTE: Three phase motors do not have capacitors fitted in the Capacitor Cover).
This is achieved by way of either of the two 19mm access holes (marked “B” in figure one). The access holes are designed to accept most standard cable grommets. The unused hole can be sealed by inserting the plug enclosed with the pump. To connect a three phase Pressure Pump start by removing the Terminal Cover (“C”)

A short four core flex (“D”) is fitted from the motor terminals (“E”). This lead is inserted through the blanking grommet (“F”). Pressure switch or other control leads (“G”) can be fitted as well. Incoming power (“H”) can be fitted through the preferred access hole, and terminated as shown in Figure Three. A termination kit is available if required.

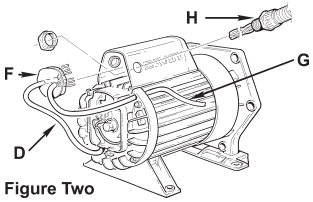

Figure Two

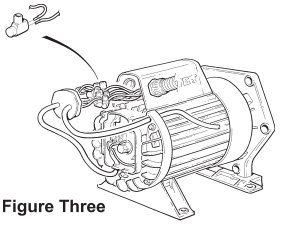
Figure Three

Insert the blanking grommet (“F”) into the capacitor cover (“A”). Fix the short lead (“D”) into the path provided in the non-drive endshield and replace the terminal cover (“C”).

IMPORTANT NOTE: THREE PHASE MODELS ONLY

Before finalising wiring connections, check that motor rotates in direction of arrow (clockwise when shaft is viewed from wiring connection end). To alter rotation, change any two power leads at motor terminals.

When the unit is connected and operating the phase balance should be checked. This should be within 5% variation. “Rolling” the leads may help to improve a small unbalance, but major phase unbalance will usually be attributed to an input power unbalance. This must be addressed before the pump is used.

Power connections and wiring must be carried out by an Authorised Electrician.

Note: Minimum three phase voltage supply at the motor must not fall below 374 volts, otherwise motor damage may result which is not claimable under Guarantee.

ADDITIONAL NOTES ON ELECTRICAL CONNECTION

1. If the electrical fittings in your area make it necessary to remove the plug fitted to single phase motors, care should be taken to ensure that the earth conductor is properly connected to earth.
2. Long extension leads should be avoided as they often have insufficient current carrying capacity to run electric motors; hence they can cause substantial voltage drop and operating problems.
3. The minimum voltage at the electric motor must not fall below 216 Volts for 220/250V single phase supply or 432 Volts for 480V single phase supply or 374 Volts for 3 phase supply. Supply voltages below these limits may cause motor failure which is not claimable under guarantee.

PRESSURE SWITCH SETTING (Applicable to Pressure System Models Only.)

Shallow Well Installations
For installations with shallow well jet kits it is necessary to set the pressure switch cut in and cut out settings according to the table below. Instructions for altering the pressure switch setting are under the cover of the switch.

MODEL	Shallow Well Jet Kit	Pressure Switch Setting	
		kPa	psi
Prime	680	240-370	35-54
Jet	681	300-470	44-68
240	682	400-590	58-86
	683	500-690	73-100

Deep Well Installations
Pressure systems to be installed with deep well injectors need no adjustment to the pressure switch as the factory setting is satisfactory for all deep well injectors (210-350kPa, 30-50psi).

PUMP CONNECTIONS



A gate valve must be fitted at the outlet of all pumps prior to the connection of outlet piping.

(A) Pumps to be operated as Automatic Pressure Systems:
* Connect hose kit to Davey Supercell Pressure Tank and to bottom of outlet tee on pump as shown in illustration. Firm tightness should be sufficient. Ensure tank connection hose is not kinked.
* Fit gate valve to outlet tee of pump using thread seal tape.
* Connect delivery piping at gate valve.
* Fit pressure gauge on top of pump.

(B) Pumps to be operated Manually at Power Point:
* Disconnect pressure switch barrel union on top of pump then screw stainless steel self tapping screw into pressure switch port to block it off.
* Reconnect barrel union.
* Fit gate valve to pump outlet ($1^{1}/_{4}$" Female) using thread seal tape.
* Connect delivery piping at gate valve.
* Fit pressure gauge on top of pump. A non-return valve may need to be fitted in the delivery piping on some installations to prevent water siphoning back through the pump. Consult your Davey Dealer or the Davey Customer Service Centre.

PRESSURE TANK PRE-CHARGE (Applicable to Pressure System Models Only.)

The Supercell pressure tank requires the correct pre-charge of air for satisfactory operation. This pre-charge of air is determined by the cut-in pressure switch setting for the particular system purchased. Prime Jet 240 Supercell 30 Pressure Tanks are factory pre-charged to 245kPa (35psi) which is suitable for a pressure switch cut in of 230kPa (33psi). To adjust for a higher cut in pressure setting add air at the valve on top of the tank until the pressure is 15kPa (2psi) below the proposed pressure switch cut in. Adjust this pre-charge before installing the pressure system.

OPERATING THE PUMP

(A) Shallow Well Installations

Close gate valve at outlet of pump. Remove the priming plug and fill pump body and suction pipe by pouring water into the priming port on top of the pump or open gate valve on supply reservoir to allow water to flow into pump. Air will be expelled as the suction pipe is filled with water.
When all the air has “bubbled” out replace the priming plug. Do not run the pump without water.
Switch on power to pump.
Crack air bleed screw on priming plug to expel trapped air.
Allow pump to run until a change in sound of pump indicates that prime is established and pressure gauge reading rises to over 350 kPa.
Open gate valve at pump outlet.
A strong flow of water should be evident at an outlet tap indicating pump is functioning. If there is no strong flow of water at the outlet tap or the pressure gauge reading drops away, reprime the pump and repeat.
On long suction lines it may be necessary to re-prime several times to expel all the air from the suction line to allow the pump to operate efficiently.



NOTE: The use of an engine powered pump to force water up the suction pipe from the water source may simplify priming long suction lines.

To Check Correct Operation of a Pressure System with Pressure Tank Fitted
Close gate valve at pump outlet. Allow pump to run and build up pressure until it switches off automatically at the cut-out pressure setting of the pressure switch. Open gate valve on pump outlet then turn on a tap in the outlet pipework. Pump should automatically switch on at cut-in pressure setting.

(B) Deep Well Installations

Ensure both suction pipes are full of water and all pipe connections are well sealed.
Fill pump by pouring water in at priming port on top of pump. Replace priming plug when all air has “bubbled” out. Crack air bleed screw to expel trapped air.
Switch on power to pump.
Close gate valve at outlet of pump.
If correctly primed, pressure gauge reading will quickly climb to over 350 kPa.
On deep well installations it may be necessary to reprime several times to expel all the air in the pipes.
Once prime is established slowly open gate valve at pump outlet.
A strong flow of water should be evident at an outlet tap indicating pump is functioning.
On OFFSET deep well installations the suction lines may not rise evenly from water source to pump and so trapped air in a hump will prevent priming. A tee installed at the highest point in both pipes may be used to add water at this point provided that it is well sealed and air tight before pump operation.



NOTE: The use of an engine powered pump to prime OFFSET deep well suction pipes from the water source may simplify the priming process.

To Check Correct Operation Of A Pressure System With Pressure Tank Fitted
Close gate valve at pump outlet. Allow pump to run and build up pressure until it switches off automatically at the cut-out pressure setting on the pressure switch.
Open gate valve on pump outlet then turn on a tap in the outlet pipework. Pump should automatically switch on at cut-in pressure switch setting. Refer to the "Pressure Switch Settings" section earlier in these instructions.

MINIMUM OPERATING PRESSURE FOR DEEP WELL INSTALLATIONS



NOTE: Deep Well installation require a certain minimum reading on the pressure gauge for the pump to operate satisfactory. If pump is allowed to operate below this minimum operating pressure, cavitation may occur which causes excessive pump wear, alternatively, prime may be lost.

INJECTOR KIT NO.	427	428	468	566	567	568	569
Minimum Operating Pressure kPa	280	280	280	270	270	290	240

Automatic Demand Response (ADR) - Setting up instructions

Deep Well installations require a certain minimum pump pressure to operate satisfactorily (See Table above). With the adjustment screw on the ADR valve adjusted fully out run the pump. Open gate valve (situated near pump) to discharge water freely until pressure on gauge drops to minimum operating pressure as table above or until pump nears cavitation point. Screw ADR valve adjustment in until pressure starts to rise. Open gate valve a little further, then readjust ADR valve to maintain required minimum pressure on gauge. When gate valve is fully open and ADR valve is maintaining operating pressure, adjustment is complete.
Once set, there should be no need to alter the setting of the ADR valve. ADR valve should be set by discharging water adjacent to pump before connecting outlet pipework or pressure tank.

MINIMUM OPERATING PRESSURE FOR SHALLOW WELL INSTALLATIONS
Set the minimum operating pressures for Shallow Well pumps to the pressure indicated in the table below.

INJECTOR KIT NO.	680	681	682	683
Minimum Operating Pressure kPa	240	300	400	500



NOTE: Shallow Well installations require a certain minimum reading on the pressure gauge for the pump to operate satisfactorily. If pump is allowed to operate below this minimum operating pressure, cavitation may occur which causes excessive pump wear, alternatively, prime may be lost.

TROUBLE SHOOTING

1. PUMP NOT DELIVERING WATER OR NOT BUILDING UP PRESSURE:

May be caused by one or more of the following:

a. Pump not properly primed;
b. Footvalve or checkvalve not installed or leaking;
c. Footvalve not installed below water level;
d. Suction lift too high;
e. Suction piping not correctly sealed or holed allowing air to enter pump suction;
f. Check valve installed in wrong direction;
g Blocked jet or venturi;
h. Piping connected in reverse on deep well, i.e. suction and pressure pipes transposed;
i. Motor thermal overload tripping - refer paragraph 3;
j. Insufficient water supply source;
k. Pressure system not switching on due to static delivery head causing higher pressure on the pump than pressure switch cut-in.

2. PUMP NOT OPERATING AT MINIMUM OPERATING PRESSURE FOR DEEP WELL INJECTOR:

a. Usually caused by air leaks in suction pipe.

3. MOTOR NOT RUNNING:

May be caused by one or more of the following :

a. Power failure;
b. Blown fuse;
c. Motor overload tripping;
d. Motor windings faulty.

4. MOTOR THERMAL OVERLOAD TRIPPING:

May be caused by one or more of the following :

a. Low voltage supply;
b. Motor or pump seized;
c. Motor windings faulty.

5. PUMP (AUTOMATIC SYSTEM WITH TANK) SWITCHING ON AND OFF FREQUENTLY OR WHEN NO TAPS TURNED ON:

May be caused by one or more of the following :

a. Footvalve or checkvalve not retaining pressure or water;
b. Water leaking from suction or delivery piping;
c. Ball valve in toilet cistern, hot water system, or stock troughs incorrectly set or faulty;
d. Pressure tank not retaining air pressure or air charge too high;
e. Motor thermal overload tripping - refer preceding paragraph.

6. PUMP (AUTOMATIC SYSTEM WITH TANK) NOT SWITCHING OFF OR TAKING TOO LONG TO SWITCH OFF:

May be caused by one or more of the following :

a. Voltage supply too low;
b. Blocked jet or venturi;
c. Leak in discharge pipe or fittings, taps etc.;
d. Worn or blocked pump components impeller, casing etc.;
e. Drop in water level in water supply source.

SPARE PARTS

When ordering spare parts it is essential to give both pump model and motor type numbers from nameplate, and the full description of part required.

Davey Warranty

Davey Water Products Pty Ltd (Davey) warrants all products sold will be (under normal use and service) free of defects in material and workmanship for a minimum period of one (1) year from the date of original purchase by the customer as marked on the invoice, for specific warranty periods for all Davey products visit daveywater.com.

This warranty does not cover normal wear and tear or apply to a product that has:

- been subject to misuse, neglect, negligence, damage or accident
- been used, operated or maintained other than in accordance with Davey's instructions
- not been installed in accordance with the Installation Instructions or by suitably qualified personnel
- been modified or altered from original specifications or in any way not approved by Davey
- had repairs attempted or made by other than Davey or its authorised dealers
- been subject to abnormal conditions such as incorrect voltage supply, lightning or high voltage spikes, or damages from electrolytic action, cavitation, sand, corrosive, saline or abrasive liquids,

The Davey warranty does not cover replacement of any product consumables or defects in products and components that have been supplied to Davey by third parties (however Davey will provide reasonable assistance to obtain the benefit of any third-party warranty).

To make a warranty claim:

- If the product is suspected of being defective, stop using it and contact the original place of purchase. Alternatively, phone Davey Customer Service or send a letter to Davey as per the contact details below
- Provide evidence or proof of date of original purchase
- If requested, return the product and/or provide further information with respect to the claim. Returning the product to the place of purchase is at your cost and is your responsibility.
- The warranty claim will be assessed by Davey on the basis of their product knowledge and reasonable judgement and will be accepted if:
  - a relevant defect is found
  - the warranty claim is made during the relevant warranty period; and
  - none of the excluded conditions listed above apply
- The customer will be notified of the warranty decision in writing and if found to be invalid the customer must organise collection of the product at their expense or authorise its disposal.

If the claim is found to be valid Davey will, at its option, repair or replace the product free of charge.

The Davey warranty is in addition to rights provided by local consumer law. You are entitled to a replacement or refund for a major failure and compensation for any other reasonably foreseeable loss or damage. You are also entitled to have the goods repaired or replaced if the goods fail to be of acceptable quality and the failure does not amount to a major failure.

For any internet connected products the consumer is responsible for ensuring a stable internet connection. In the event of a network failure the consumer will need to address the concern with the service provider. Use of an App is not a substitute for the User's own vigilance in ensuring the product is working to expectation. Use of a Smart Product App is at the User's own risk. To the fullest extent permitted by law Davey disclaims any warranties regarding the accuracy, completeness or reliability of App data. Davey is not responsible for any direct or indirect loss, damage or costs to the User arising from its reliance on internet connectivity. The User indemnifies Davey against any claims or legal actions from them or others relying on internet connectivity or App data may bring in this regard.

Products presented for repair may be replaced by refurbished products of the same type rather than being repaired. Refurbished parts may be used to repair the products. The repair of your products may result in the loss of any user-generated data. Please ensure that you have made a copy of any data saved on your products.

To the fullest extent permitted by law or statute, Davey shall not be liable for any loss of profits or any consequential, indirect or special loss, damage or injury of any kind whatsoever arising directly or indirectly from Davey products. This limitation does not apply to any liability of Davey for failure to comply with a consumer guarantee applicable to your Davey product under local laws and does not affect any rights or remedies that may be available to you under local laws.

For a complete list of Davey Dealers visit our website (daveywater.com) or call:

DAVEY

Davey Water Products Pty Ltd
Member of the GUD Group
ABN 18 066 327 517

daveywater.com

AUSTRALIA

Customer Service Centre
6 Lakeview Drive,
Scoresby, Australia 3179
Ph: 1300 232 839
Fax: 1300 369 119
Email: sales@davey.com.au

NEW ZEALAND

Customer Service Centre
7 Rockridge Avenue,
Penrose, Auckland 1061
Ph: 0800 654 333
Fax: 0800 654 334
Email: sales@dwp.co.nz

® Davey is a registered trademark of Davey Water Products Pty Ltd. © Davey Water Products Pty Ltd 2022.