DAVEY

DAVEY PowerMaster®

ECO-2 SPEED

INSTALLATION AND OPERATING INSTRUCTIONS



WARNING: Failure to follow these instructions and comply with all applicable codes may cause serious bodily injury and/or property damage.

The installation of this product should be carried out by a person knowledgable in swimming pool plumbing requirements following the installation instructions provided in this manual.

Please pass these instructions on to the operator of this equipment.

Congratulations on the purchase of a quality product from the Davey Water Products range of Pool and Spa Equipment. You are assured of many years of reliable and super-efficient performance from your Davey PowerMaster® ECO-2Speed pump.

Read these instructions in their entirety before switching on this pump. If you are uncertain as to any of these installation and operating instructions please contact your Davey dealer or the appropriate Davey office as listed on the back of this document.

The Davey PowerMaster® range has been designed to circulate swimming pool and spa water in conditions set out in the Australian Standard for swimming pool water quality AS 3633 or equivalent. They should not be used for any other purpose without first consulting your Davey Dealer or the Davey Customer Service Centre.

Every Davey PowerMaster® is thoroughly water tested against a number of flow, pressure, voltage, current and mechanical performance parameters. Davey`s advanced pump manufacturing technology provides reliable and efficient pumping performance that lasts and lasts.

Saving Energy with your Davey PowerMaster® ECO-2Speed Pump:

The Davey PowerMaster® ECO-2Speed Pool & Spa pump is a 6 Star super efficient pump utilising a 2 speed AC motor that provides lower levels of noise, lower operating costs and lower greenhouse emissions than traditional pool pumps, when properly installed.

Due to its ability to run at lower speeds than conventional pumps, your PowerMaster® ECO-2Speed pump will also experience less mechanical wear and tear due to less stress on the internal mechanical components.

To achieve energy efficient pumping is easy. Setting the pump to run at low speed for filtration over a longer period of time will achieve the required amount of pool turnover for adequate filtration and sanitisation. The result is lower energy use and lower operating costs than traditional fixed speed pumps.

A guideline for running hours at low speed in relation to pool size is provided on page 5 of this document.

The PowerMaster® ECO-2Speed has 2 speeds, so you can circulate the water at low speed, then switch to high speed when required. High speed will help power an automatic pool cleaner and should be selected to backwash a media filter or when you want to manually vacuum your pool.

What to expect with low speed pumping (energy efficient operation) on your pool:

If your PowerMaster® ECO-2Speed pump is replacing your old fixed speed pump, you will need to run it for a longer period each day. This is to ensure you have adequate pool turnover and saves energy when running in low speed.

You may also notice that the pressure gauge on your filter is indicating a much lower pressure than you are used to. The lower system pressure is simply a result of the lower speed and flow rate produced by the pump.

While running at the lower speed settings you will also notice a significant reduction in pump noise. This is a major benefit for you as it allows you to run your pump during off peak electricity tariffs, which will also assist in the reduction of your operating costs. Plus, you will also have much happier neighbours.

Important Considerations for Low Flow Operations:

Many pool products rely on particular minimum flow rates for best operation and/or efficiency. If you are using a low flow pump on your pool, such as the PowerMaster® ECO-2Speed pool pump, Davey recommends that you check the compatibility of it with other pool equipment such as:

- Automatic pool cleaners
- Ozone generators
- Pool Heaters
- Solar Heating systems
- Salt Water Chlorinator cells

Such equipment may require minimum operating pressures and flow rates and should be checked to ensure your pool system operates correctly.

Your Davey dealer can advise you on this.

Technical Specifications:

Model	PMECO 2 Speed
RPM	Low Flow Speed – 1450
	High Flow Speed – 2850
Enclosure Class (IP)	25
Insulation Class	Class F155 Insulation
Voltage (V)	240 AC
Supply Frequency (Hz)	50
Run Current (A)	7.1
Motor Input Power (W / hp)	Low Flow - 279w / 0.37 hp
	Hi Flow – 1510w / 2.02 hp
Motor Output Power (W / hp)	Low Flow - 223w / 0.30 hp
	Hi Flow – 1208w / 1.62 hp

Operating Limits:

Max Water temperature	50°C
Max Ambient temperature	55°C

Dimensions:

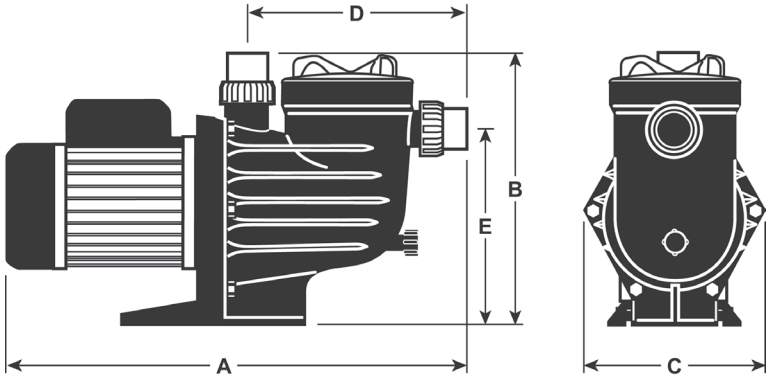

Model	A	B	C	D	E	Mounting Holes Diam	Inlet / Outlet PVC	Net Weight (kg)
PMECO 2 Speed	645	330	250	305	246	10	*40/50	16.8

All dimensions in mm unless otherwise stated

*Suction & delivery accept 40mm PVC pipe on the ID & a 50mm fitting on the OD.

Low Energy Operation:

Your PowerMaster® ECO Series pump has 2 speed settings:

1. Low Flow – Lowest Speed
2. High Flow – Highest Speed

Low Flow mode provides the lowest speed and therefore the greatest energy savings. (Saves 70% of the high speed cost).

Operation	Recommended Speed Setting
Pool Filtration	Low Flow
Automatic pool cleaner operation	High Flow
Backwashing your media filter	
Manually cleaning your pool	
Water Feature operation	
Spa Jet operation	
Solar pool heating	

Guidelines for Recommended Pump Operating Hours:

Australian Standards AS3633: “Private swimming pools - water quality” states that “The minimum turnover rate shall be a single turnover of the full volume of the pool water, within the period that the pump would normally be operating….”

The table below provides a guide to the running times of your pump while in filtration mode in order to achieve the minimum turn over rate:

Pool Size (Litres)	Speed Setting (hours)	
	Low Flow	High Flow
20,000	2.3	1.2
30,000	3.5	1.8
40,000	4.7	2.4
50,000	5.9	3.0
60,000	7.0	3.6
80,000	9.4	4.7
100,000	11.7	5.9

Installation of the PowerMaster® ECO-2Speed Pump:

Location

The pump should be located as close to the water as practical and mounted on a firm base in a well drained position, high enough to prevent any flooding. It is the installer's/owner's responsibility to locate the pump such that the nameplate can be easily read and the pump can be readily accessed for service.

Weather Protection

It is recommended that the pump is protected from the weather. Enclosures should be ventilated to prevent condensation build-up and allow a free flow of air for the fan cooled motor.

Power Connection

Davey Power Master® ECO-2Speed is suitable for connection to a nominal 240 volt 50Hz power supply and is equipped with a flex and 3 pin plug. If a power outlet is not available within 3 metres of the pump, a 3 pin power point in a safe, dry place may need to be provided by an electrician. Extension cords are unsafe around pools - and should be avoided. If the supply cord of this product is damaged it must be replaced by the dealer or manufacturer, with genuine Davey spare parts.

This PowerMaster® Eco-2Speed pump incorporates an in built thermal overload designed to protect the motor from overheating. The thermal overload will re-set automatically after the motor has cooled down.



CAUTION: In the interest of safety, we advise that all brands and types of pool pumps must be installed in accordance with AS3000 wiring rules or equivalent.



If the pump and filter are located below pool water level, it is necessary to fit isolating valves in the pipe between the pump and skimmer box and in return pipe from the filter to the pool.



The fittings on this product are constructed of ABS. Some PVC jointing compounds are incompatible with ABS. Check compound suitability before use.

NOTE: PowerMaster® Pool Pumps are fitted with an internal check valve to reduce reverse flow of water through the pump.



Warning! Ensure that an electrical isolation switch is located with easy access so that the pump can be switched off in an emergency.



Small children using the pool or spa must ALWAYS have close adult supervision.



In accordance with AS/NZS60335.2.41 we are obliged to inform you that this device is not to be used by children or infirm persons and must not be used as a toy by children.



Power supply to this pump needs to be through an isolating transformer on RCD, having a rated operating current not exceeding 30mA.

Pipe Connection

A barrel union is provided for connecting to the piping from the pool. The pumps are designed to accept 40mm PVC on the ID or a 50mm PVC fitting on the OD.

The use of any pipe smaller than those specified above is not recommended. Suction piping should be free from all air leaks and any humps and hollows which cause suction difficulties and can result in poor pump performance.

The discharge piping from the pump outlet should be connected to the inlet connection on the swimming pool filter (usually at the filter control valve).



Barrel unions need to be hand tightened. No sealant, glues or silicones are required.

Prior to using this pump you must ensure that: *Checklist*

- Low Speed Setting provides required pressure and flow for other pool equipment ☐
- The pump is installed in a safe and dry environment ☐
- The pump enclosure has adequate drainage in the event of leakage ☐
- Any transport plugs are removed ☐
- The pipe-work is correctly sealed and supported ☐
- The pump is primed correctly ☐
- The power supply is correctly connected ☐
- All steps have been taken for safe operation ☐
- The filter has been plumbed with 40/50mm pipe ☐

To realise the best energy efficiency from your pump, please follow these installation recommendations:

- Suction pipe length should be kept as short as possible
- Install a 450mm long straight pipe horizontally into the front of the pump
- Minimise the number of bends in the plumbing

Starting the Pump

To operate efficiently and prevent pump damage there must be a free flow of water to and from the pump. Before starting ensure that:

- All pipework is correctly sealed.
- The pool/spa water level is at the correct height.
- That all appropriate valves are open and there is nothing preventing the flow of water through the system.

1. First prime the pump by removing the strainer basket lid and filling the strainer basket area with water. Replace the lid, ensuring that it seals on the large o-ring.
2. Ensure the speed switch located on the motor is set to High.
3. Connect to the power supply and switch on.
4. Allow the pump to run, so that any air trapped may be expelled.
5. If prime is not established within approximately three minutes, as evidenced by a strong flow of water and no bubbles returning to the pool, **switch off the pump and repeat the procedure**. Continued evidence of air under the strainer basket lid indicates an air leak in the suction piping which should be rectified to avoid pump damage.
6. The speed switch can then be moved to low, for every day filtration.

For optimum pump performance, the strainer basket housing should always be full of water and free from air bubbles. The water level of the pool should always be maintained to at least halfway up the skimmer box ensuring water is in the pump at all times. From time to time it may be necessary to re-prime the pump. This should be carried out as described above.



Never run pump dry. Running the pump with no water may damage the mechanical seals, causing leakage and flooding. Dry running damage and associated damage is not covered under warranty.

Using your PowerMaster® ECO-2Speed pump with a Davey Salt Water Chlorinator:

Davey ChloroMatic® and EcoSalt™ salt water chlorinators require a minimum flow rate of 80 litres per minute (lpm) through the chlorinator cell for best efficiency and cell life. The Davey PowerMaster® ECO-2Speed can provide 130 lpm at 37 kPa (3.8 meter head). Please refer to the performance graph below as a reference for the flow in your pool and refer to the pressure indicated by the gauge on the filter.

Ensure flow rate is sufficient to cover cell plates completely at all times of operation.

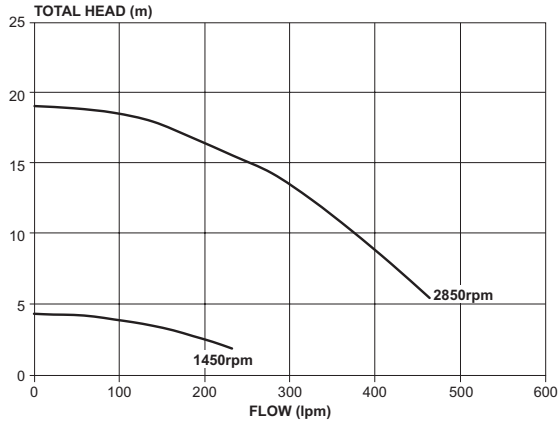

Operating your Automatic Pool Cleaner:

Before installing or purchasing a pool cleaner for use with your PowerMaster® ECO-2Speed Pump, it is important to know the minimum flow rates required for it to operate effectively:

Davey PoolWIZARD Cleaners

The Davey automatic pool cleaners have the following minimum required flow rates:

Davey Pool Cleaner Model	Min Required Flow Rate (lpm)	Recommended speed setting
LeafWIZARD®	140	High Flow
Frill-NeckWIZARD®	60	High Flow
PoolSweepa™ Hybrid	96	High Flow
PoolSweepa™ Robotics	N/A	Operate separately from pump

To operate an automatic pool cleaner with your PowerMaster® ECO-2Speed pump:

1. Activate the High Flow setting and allow the pump to fully prime by running for around 3 minutes. You will know the pump is primed when you can see a strong flow of water through the clear leaf basket lid.
2. When all air is expelled from the leaf basket, connect the pool cleaner hose firmly into the skimmer plate or dedicated wall suction.
3. The cleaner should only be connected for as long as is required to clean the surface of your pool. When cleaning is complete, disconnect the cleaner and remove the skimmer plate from the skimmer box.

NOTE: To get optimum energy efficiency from your PowerMaster® pump DO NOT keep the automatic pool cleaner connected when cleaning is not required.

5. Reactivate the most efficient speed setting for daily filtration. The Low Flow setting is recommended.

Maintenance:
Emptying the Strainer Basket

The strainer basket should be inspected frequently through the transparent lid and emptied when a build up of rubbish is evident. The directions below should be followed.

1. Switch off pump.
2. Unscrew the strainer basket lid anti-clockwise and remove.
3. Remove the strainer basket by lifting upwards from its housing.
4. Empty the trapped refuse from the basket. Hose out with water if necessary.

NEVER knock the plastic basket on a hard surface as it will cause damage.

5. Check the strainer basket for cracks, replace the strainer basket in the pump if OK.

6. Replace the lid and ensure that it seals on the large rubber o'ring. **Firm hand tightness only is required.** The o'ring & thread can be lubricated with Hydra slip or equivalent products.



Failure to undertake regular maintenance may cause damage not covered by warranty.

Trouble Shooting

If the pump runs but there is no water flow or water flow is reduced, the following conditions may apply:

1. The filter requires backwashing or it is blocked. Refer to the relevant section in the Filter Manual.
2. The pump is not primed. Re-prime as per instruction in 'Starting the pump'
3. There are air leaks in the suction piping. Check all piping and eliminate leaks, also check for a loose strainer basket lid. Air bubbles in the water flowing back to the pool indicates a leak in the suction to the pump allowing air to enter the pipework.
4. A leaking pump shaft seal may also prevent operating. Evidence of this would be water on the ground under the pump.
5. The pump is not able to get water from the pool. Check that the valves to the pump are fully open and that the pool water level is up to the skimmer box.
6. Blockage in the piping or pump. Remove the strainer basket and check for any blockage to the pump impeller entry. Check the skimmer box for blockage.

If the pump does not operate, the following conditions may apply:

1. The power is not connected. For 240 volt only, check the power point by plugging in a portable appliance to ensure power is available. Also check fuses and the main power supply switch
2. Automatic overload is tripped. The pump has an in-built thermal overload which will re-set automatically after the motor has cooled following an overheating period. Determine the cause of the overload tripping and rectify.
3. Blockage is preventing the pump from rotating.
4. Motor is burnt out - burning smell is evident. Replacement is required. If you are unable to resolve any installation or operation difficulties with your PowerMaster®, contact the supplier from whom the pump was purchased or your nearest Authorised Davey Pool Equipment Service Centre. If any further assistance is required, contact the Davey Customer Service Centre at the address indicated in this manual.

Removal of the Pump from Pipework

Should it be necessary to remove the pump, follow these instructions:

1. Switch off the power and remove the plug from the power source.



NOTE: If the pump is wired into a time clock or another automatic control, the wiring should be removed by a qualified technician.

2. Close the water valves on the pool return and the pump inlet pipework.
3. Remove the discharge & suction barrel unions taking care not to lose the o'rings.
4. Move the pipework with the barrel unions attached until the pump can be pulled clear.



NOTE: When making any enquiries about your PowerMaster® be certain to quote the model number from the nameplate located on the motor.

Water Quality

Maintaining balanced water chemistry is important to the life of your pool pump. This pump is designed to be used with Pool & Spa water, balanced in accordance with Langlier Saturation Index, with a pH level of between 7.2 and 7.8 and is regularly treated with a chlorine sanitising agent with the level not exceeding 3.0 ppm.

Please consult your local pool shop regularly to have your water tested.



POWER CONNECTIONS AND WIRING MUST BE CARRIED OUT BY AN AUTHORISED ELECTRICIAN.



DANGER - Hazardous suction. Do not block water entry into filtration system with any part of your body as the pressure can trap hair or body parts, causing severe injury or death. Do not block suction.
Turn off pump immediately if someone becomes trapped.



Caution! Do not add chemicals directly to the pool skimmer. Adding undiluted chemicals may damage pump and filter and void warranty.



Routine Maintenance tasks - to maximise the life of your pool equipment & personal safety, use this checklist once a week. Turn pump off first.

a. Make sure that any pressure gauges are in working condition and the operating pressure is within limits as specified on the product.
b. Make sure that each suction inlet, and main drain has a cover that is securely attached and in safe working condition.
c. Make sure that all skimmer covers are securely attached and in safe working condition. These should be replaced every 3 to 4 years.
d. Remove any obstructions or debris from the main drain cover.
e. Ensure the skimmer baskets and the pump hair and lint pots are free of leaves and debris at least once a week.
f. Remove obstructions and combustibles from around the pump motor.
g. Make sure all wiring connections are clean and that all wiring and electrical equipment is in good condition. Damaged wiring must be repaired or replaced by a qualified electrician as soon as damage is discovered.
h. Check water balance and sanitiser levels at your local pool shop.



WARNING! Pump suction is hazardous and can trap and drown or disembowel bathers. Do not block suction. Do not use or operate swimming pools, spas or spa baths if a suction cover is broken, missing or loose. Two suction covers and inlets must be provided into every pump to avoid suction entrapment.

Davey® Repair or Replacement Guarantee

In the unlikely event in Australia or New Zealand that this Davey product develops any malfunction within warranty periods beginning from the date of original purchase due to faulty materials or manufacture, Davey will at our option repair or replace it for you free of charge, subject to the conditions below.

Should you experience any difficulties with your Davey product, we suggest in the first instance that you contact the Davey Dealer from which you purchased the Davey product. Alternatively you can phone our Customer Service line on 1300 367 866 in Australia, or 0800 654 333 in New Zealand, or send a written letter to Davey at the address listed below. On receipt of your claim, Davey will seek to resolve your difficulties or, if the product is faulty or defective, advise you on how to have your Davey product repaired, obtain a replacement or a refund.

Your Davey Three Year Guarantee naturally does not cover normal wear or tear, replacement of product consumables (i.e. mechanical seals, bearings or capacitors), loss or damage resulting from misuse or negligent handling, improper use for which the product was not designed or advertised, failure to properly follow the provided installation and operating instructions, failure to carry out maintenance, corrosive or abrasive water or other liquid, lightning or high voltage spikes, or unauthorized persons attempting repairs. Where applicable, your Davey product must only be connected to the voltage shown on the nameplate.

Your Davey Guarantee does not cover freight or any other costs incurred in making a claim. Please retain your receipt as proof of purchase; you **MUST** provide evidence of the date of original purchase when claiming under the Davey Guarantee.

Davey shall not be liable for any loss of profits or any consequential, indirect or special loss, damage or injury of any kind whatsoever arising directly or indirectly from Davey products. This limitation does not apply to any liability of Davey for failure to comply with a consumer guarantee applicable to your Davey product under the Australian or New Zealand legislation and does not affect any rights or remedies that may be available to you under the Australian or New Zealand Consumer Legislation.

In Australia, you are entitled to a replacement or refund for a major failure and for compensation for any other reasonably foreseeable loss or damage. You are also entitled to have the goods repaired or replaced if the goods fail to be of acceptable quality and the failure does not amount to a major failure.

Should your Davey product require repair or service after the guarantee period; contact your nearest Davey Dealer or phone the Davey Support Centre on the number listed below.

For a complete list of Davey Dealers visit our website (davey.com.au) or call:

DAVEY

Davey Water Products Pty Ltd
Member of the GUD Group
ABN 18 066 327 517

AUSTRALIA

Davey Support Centre
6 Lakeview Drive,
Scoresby, Australia 3179
Ph: 1300 367 866
Fax: 1300 369 119
Website: davey.com.au

NEW ZEALAND

Davey Support Centre
7 Rockridge Avenue,
Penrose, Auckland 1061
Ph: 0800 654 333
Fax: 09 527 7654
Website: daveynz.co.nz

® Davey is a registered trademark of Davey Water Products Pty Ltd.
© Davey Water Products Pty Ltd 2013.

Davey Water Products Pty Ltd
Member of the GUD Group
ABN 18 066 327 517

AUSTRALIA

Davey Support Centre
6 Lakeview Drive,
Scoresby, Australia 3179
Ph: 1300 367 866
Fax: 1300 369 119
Website: davey.com.au

NEW ZEALAND

Davey Support Centre
7 Rockridge Avenue,
Penrose, Auckland 1061
Ph: 0800 654 333
Fax: 09 527 7654
Website: daveynz.co.nz

® Davey is a registered trademark of Davey Water Products Pty Ltd.
© Davey Water Products Pty Ltd 2013.

P/N 402185