FLOW SENSITIVE

GENERAL PUMP *A member of the Interpump Group*

PULSAR4HPMS

Trapped Pressure Unloader Valve w/ Microswitch

FEATURES



- NEW improved design!
- Reduced pressure loss
- Makes for easier gun operation
- Extremely reliable
- Easy maintenance
- Facilitates water discharge in pressure during start-up
- Reduces energy required for start-up
- Features a 16A, 250V Microswitch
- Mechanical control of the switch for simple and reliable control

SPECIFICATIONS

PART NUMBER		PULSAR4HPMS
Maximum Volume		10.5 GPM
Rated Pressure		4050 PSI
Maximum Pressure		4500 PSI
Maximum Temperature		195º
Note: The valve has been designed for continuous use at a water temperature of 140º F. It can operate for short periods at a maximum temperature of 195º F.		
Port Sizes	Inlet	(2) 3/8" NPT-F
	Outlet	3/8" NPT-F
	Bypass	(2) 3/8" NPT-F
Overall Dimension		8.94" x 4.82" x 1.97"
Weight		1.9 Lbs.

General Pump recommends using a safety relief device in conjunction with this unloader valve when installed on a positive displacement pump. General Pump is not liable and assumes no responsibility when used in a customer's high pressure system.

DIMENSIONS

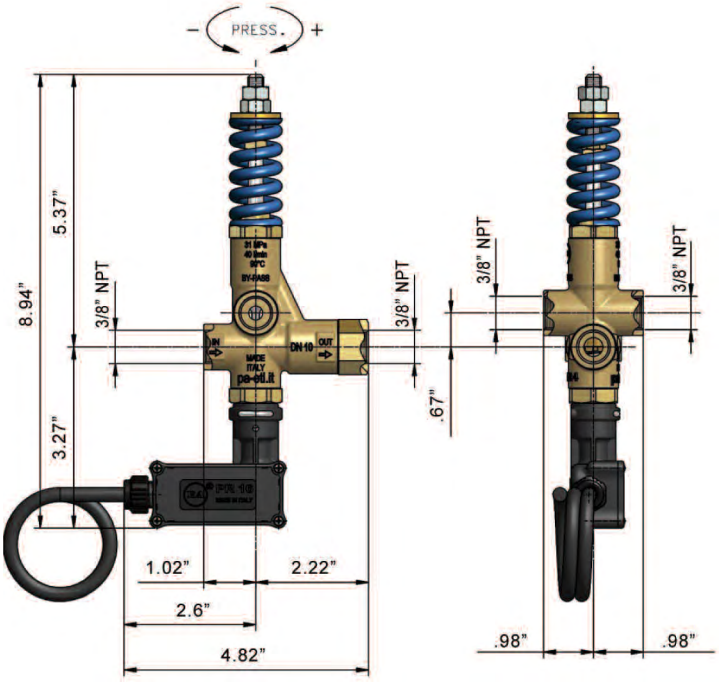

FLOW SENSITIVE

GENERAL PUMP *A member of the Interpump Group*

PULSAR4HPMS

Trapped Pressure Unloader Valve w/ Microswitch

PARTS LIST

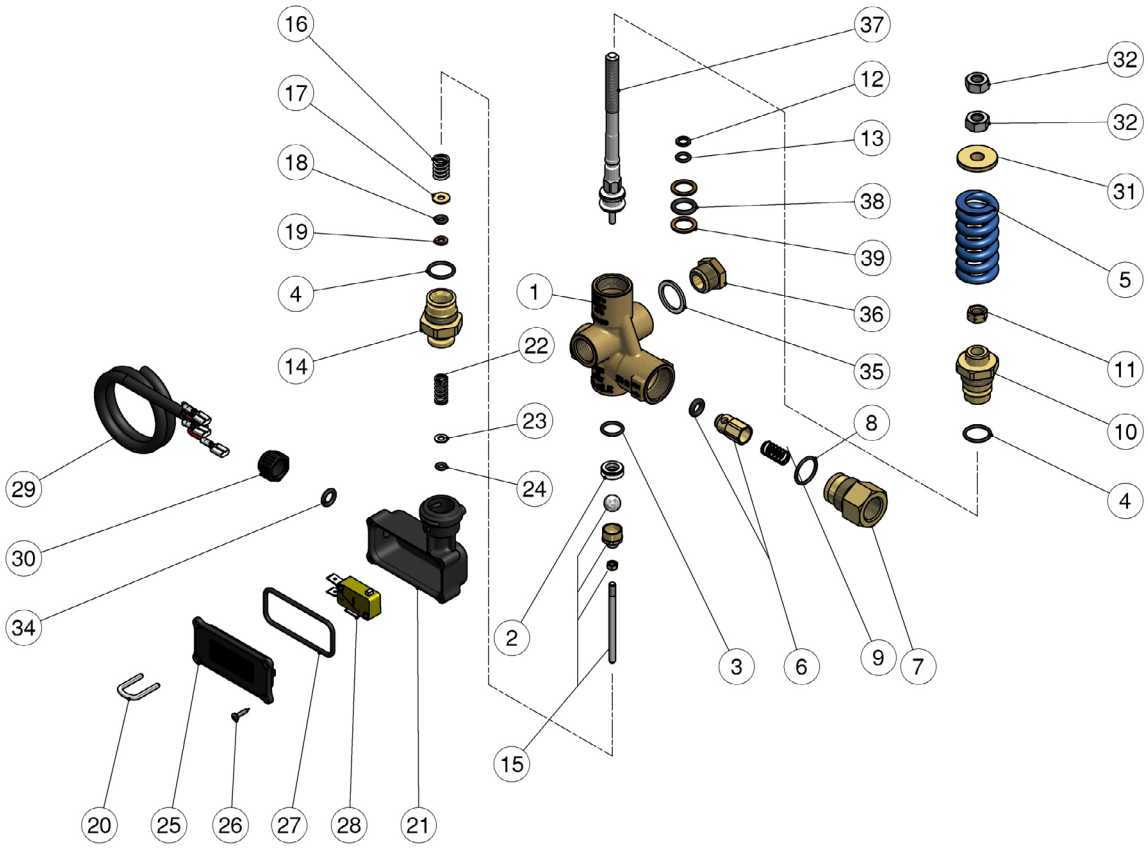

No.	Part No.	Description	Qty.
1	Y60013635	Housing, 3/8” NPT-F, Brass	1
2*	Y60025920	Seat, 8mm + O-ring, 1.78mm	1
3	Y10305901	O-ring, 1.78x11.11mm, Ni 85	1
4*	Y10306401	O-ring, 1.78x14mm	2
5	Y60003361	Spring, 5.7x26x53 mm	1
6	Y60005299	Shutter Pin, Brass + O-ring 3x6mm	1
7	Y60181731	Nipple, 3/8 NPT-F	1
8*	Y10306601	O-ring, 1.78x15.6mm, Ni 85	1
9	Y6005351	Spring, 0.7x9x20 SST	1
10	Y60014631	Piston Holder, Brass	1
11	Y11457331	Hex Nut, M8, Brass	1
12*	Y10400601	Back-up Ring, Opn, 6.2x9x1.2mm	1
13*	Y10305101	O-ring, 1.78x6.07mm	1
14	Y60015931	Microswitch Coupling	1
15*	Y60017121	Piston + Shutter	1
16	Y60001551	Spring, 1.4x10x16 mm, SST	1
17	Y60016433	Washer, 4.1x10.8x1mm	1
18*	Y10310990	O-ring, 2.4x3.66mm	1
19*	Y10400400	Back-up Ring, 7.9x4.2x1.2mm	1
20	Y29008751	U-bolt, SST	1

No.	Part No.	Description	Qty.
21	Y29004184	Casing	1
22	Y60230351	Spring, 1.1x8x20mm, SST	1
23	Y14351953	Washer, 4x8x0.8, SST	1
24*	Y10303800	O-ring, 2.4x3.66mm	1
25	Y29004284	Lid	1
26	Y16302000	S/tapping Screw, 2.5x15mm	4
27*	Y10321042	O-ring, 2.62x45.52mm	1
28	Y12500100	Microswitch, 16A, 250V	1
29	Y12500000	Cable, 3 x 1, 1200 mm	1
30	Y29008284	Locknut for Cable	1
31	Y60001131	Spring Holder, Brass	1
32	Y11457400	Hex Nut, M8	2
34	Y10310992	O-ring, 2.4x7.3mm	1
35	Y14404200	Washer, 16.7x22x1.5mm, Aluminum	1
36	Y60002831	Plug, 3/8 NPT-M	1
37	Y60003451	Piston Rod, SST	1
38	701111	O-ring, 2.62x10.77	1
39	Y10402100	Back-up Ring, 11.5x15.9x1.2	1
*	YKITPLSR4MS	Repair Kit	

GENERAL PUMP *A member of the Interpump Group*

PULSAR4HPMS

Trapped Pressure Unloader Valve w/ Microswitch

MICROSWITCH SPECIFICATIONS

Max rated voltage:	250 V
Breaking Switch:	16 A-resistive load, 6 A-inductive load
Cable length:	1200mm
Max cable amps:	10A

WIRING DIAGRAM

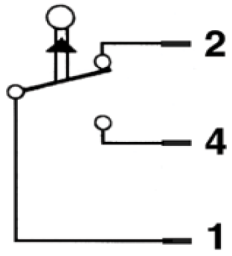

WIRING DIAGRAM
1) Red wire
2) Blue wire
3) Brown Wire

ELECTRICAL CONNECTION
N.O. Red+Brown - Normally Open
N.C. Red+Blue-Normally Closed

SELECTION AND OPERATION

SELECTION
This product is intended to be incorporated on a finished machine. This product is to be used with clean fresh water, for use involving different or corrosive liquids, contact the GP Customer Service Department. Appropriate filtration should be installed when using impure liquids. Choose the valve appropriate to the working data of the pump (permissible pressure, flow and rated temperature of the system). The pressure of the pump must not exceed the maximum pressure of the valve.

OPERATION
The valve regulates the maximum pressure of the system by varying the flow discharged by the bypass. The adjustment is made by altering, by means of a piston, the position of a sphere which partially closes the bypass opening. The valve is sensitive to water flow. At gun opening, the water flows through the valve which maintains the system in pressure until the gun closes, the interruption of the flow provokes the complete aperture of the bypass which allows to discharge the flow at low pressure. At gun closure, the special mechanism of zero setting, which does not include a check valve, keeps in connection the delivery line and the bypass line, in that way permitting to lower the pressure all around the system and not only in the source line of the valve.

INSTALLATION

This valve, on a system that produces hot water, must be fitted upstream from the source of heat. On a system that generates hot water, it is advisable to use accessories that limit the accidental increase of fluid temperature. **Always install a safety valve.** We recommend the use of a nozzle with flow rate which allows a regular discharge from the valve bypass of at least 5% of the flow supplied by the pump. In order to achieve a constant pressure and easy adjustment. If the nozzle wears out, the pressure decreases. To reset pressure back to working level, it is necessary to replace the worn nozzle. When a new nozzle is fitted, resetting of the system to its original working pressure is required.

DISCHARGE SYSTEM AND WATER ADDUCTION
The bypass discharge can be sent back to the pump intake or returned into a tank; in such cases it is advisable that the tank be fitted with baffles to reduce eventual turbulence and air bubbles which could be harmful to the pump.

PRESSURE ADJUSTMENT/CALIBRATION
The desired working pressure must be adjusted with the system running and the gun opened. Adjust the pressure by screwing or unscrewing the adjustment knob. The operation is easier if the correct nozzle has been chosen (see above). When screwing the adjustment knob a consequent pressure increase must be matched. If, before reaching the desired pressure, there is no pressure increase, DO NOT FORCE. Rather, check the correct ratio of nozzle/flow rate - pressure and, if necessary, replace with a smaller size nozzle.

ATTENTION: the nuts in positions 32 and 34 are mechanical security devices that limit the maximum pressure; they must absolutely NOT be removed.

MAINTENANCE

STANDARD: every 400 working hours, check and lubricate the seals with water resistant grease.

SPECIAL: every 800 working hours, check the wear of the seals and internal parts and, if necessary, replace with original GP parts taking care, during installation, to lubricate with water resistant grease.

The manufacturer is not to be considered responsible for damage as a result from incorrect fitting and maintenance.

TROUBLESHOOTING

PROBLEMS	PROBABLE CAUSES	SOLUTIONS
Frequent valve recycles	Damaged check valve O-ring Leaking connections Restricted bypass or too small diameter of the bypass hose	Replace Check or renew Clean or adapt passage diameter
Valve does not reach pressure	Piston O-rings worn out Debris between seat and shutter Seat worn out Nozzle worn out Incorrect choice of nozzle	Replace Clean the seat Replace Replace Fit with smaller nozzle
High pressure peaks at gun closure	There is not a minimum of 5% of total flow discharged in bypass Excessive flow in bypass Adjustment with spring totally compressed	Reset Correctly Change type of valve or adjust passages Loosen adjustment screw and eventually fit with smaller nozzle
Valve does not discharge at low pressure at gun closure	Jammed check valve Debris on check valve	Clean or replace Clean
Imperfect electrical signal	Loose wires Short control pin	Reconnect Adjust nut and ball holder

WARNING: This product can expose you to chemicals including lead, which is know to the state of California to cause cancer and birth defects or other reproductive harm. For more information, go to www.P65Warnings.ca.gov

GENERAL PUMP 1174 Northland Drive • Mendota Heights, MN 55120
Phone: 651.686.2199 • Fax: 800.535.1745 • e-mail: sales@gpcompanies.com • www.generalpump.com

Ref 300884 Rev. G
08-22

GENERAL PUMP