ANNOVI REVERBERI
The Power of Experience

PRESTIGE S 150

Version:
Serial number:
Code: **14303**

10/07/2017

220-240 V - 50 Hz | schuko

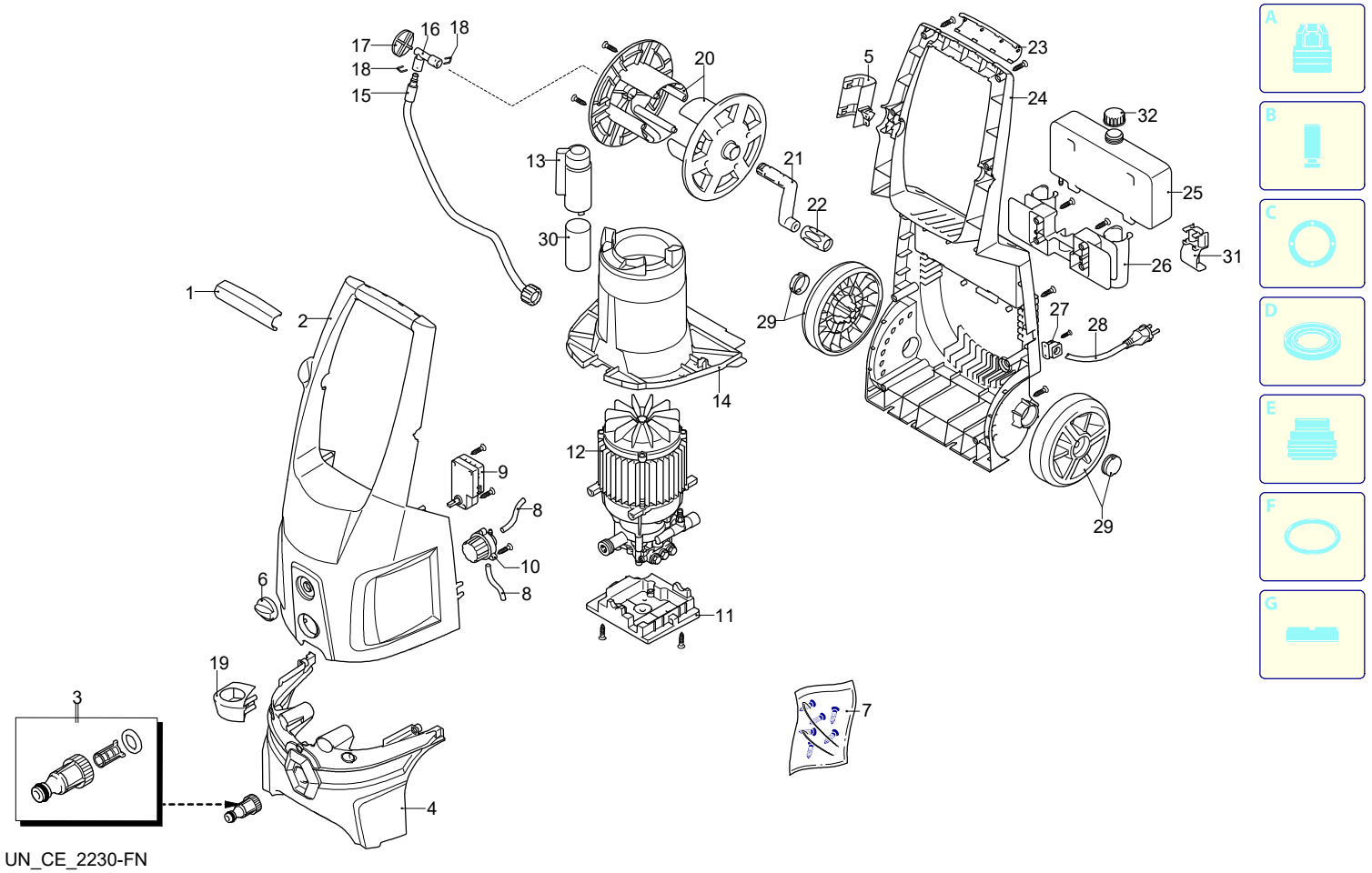

Validity	Pos.	Code	Description	Q
	1	3080810	Knob	1
	2	3083514	Casing	1
	3	3082130	Water coupling kit	1
	4	3083520	Casing	1
	5	3083840	Support	1
	6	3080480	Knob	1
	7	3400530	Screw kit	1
	8	3081490	Detergent hose	2
	9	3082010	Box	1
	10	3082000	Detergent regulator	1
	11	3440781	Support	1
	12	4101440	Electric pump assembly	1
	13	3081630	Capacitor carrier	1
	14	3080520	Conveyor	1
	15	3081640	High pressure hose	1
	16	3080781	Fitting	1
	17	3082970	Plug	1
	18	3081650	Fork	2
	19	3400110	Support	1
	20	3080390	Plate	2
	21	3080220	Lever	1
	22	3081063	Knob	1
	23	3080820	Knob	1
	24	3080323	Base	1
	25	3080370	Tank	1
	26	3080190	Accessories carrier	1
	27	3080580	Cable gland	1
	28	3082090	Cable	1
	29	3400562	Wheel	2
	30	3081620	Capacitor	1
	31	3081070	Accessories carrier	1
	32	3080380	Plug	1

ANNOVI REVERBERI
The Power of Experience

PRESTIGE S 150

Version:
Serial number:
Code: **14303**

10/07/2017

220-240 V - 50 Hz | schuko

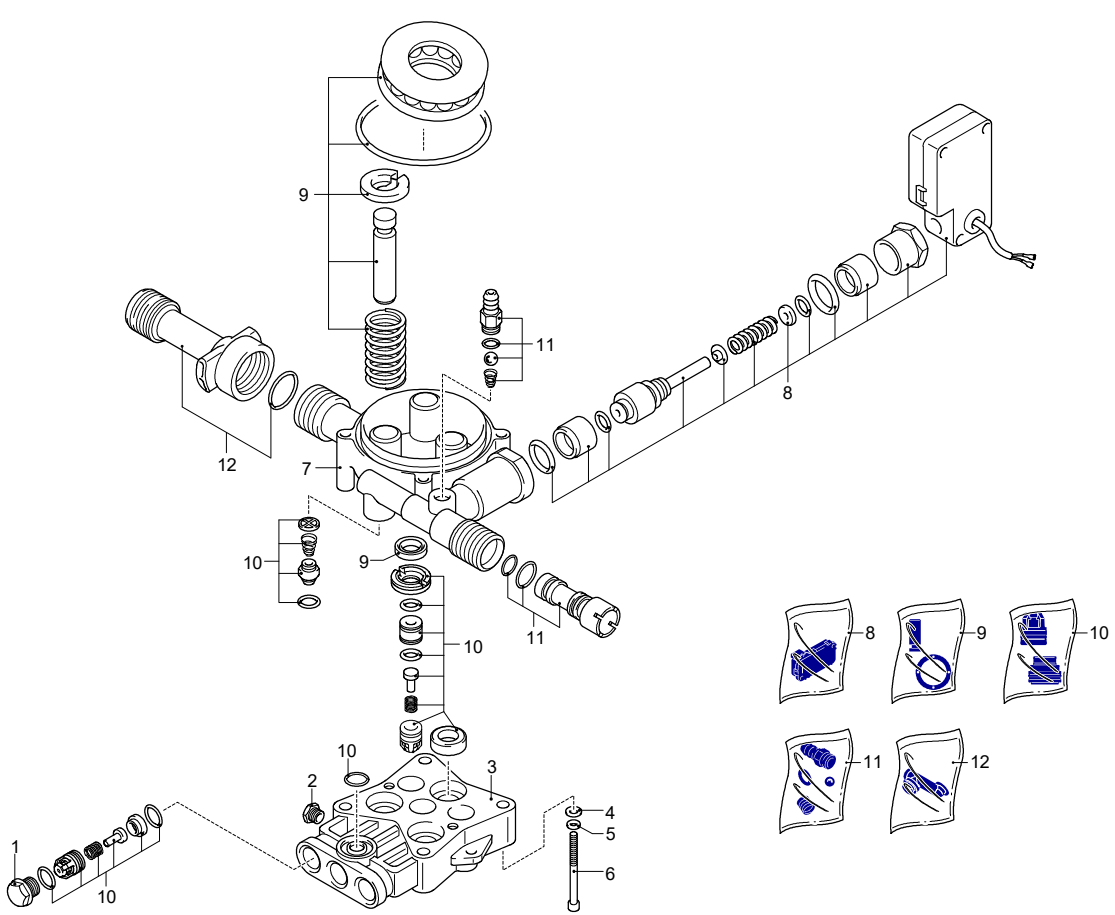

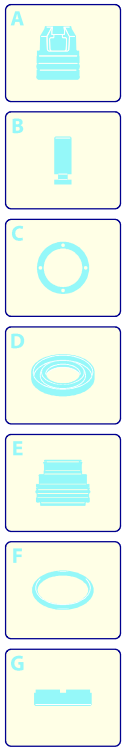

Validity	Pos.	Code	Description	Q
	1	3083210	Plug	3
	2	3081730	Screw	1
	3	3083220	Head	1
	4	3081760	Washer	4
	5	3081750	Washer	4
	6	3081740	Screw	4
	7	3083230	Pump body	1
	8	3440560	TSS kit	1
	9	3440570	Piston + seals kit	1
	10	3081290	Valves + seals kit	1
	11	3440610	Detergent suction kit	1
	12	3440620	Suction kit	1

UN_CE_0757-NW

ANNOVI REVERBERI
The Power of Experience

PRESTIGE S 150

Version:
Serial number:
Code: **14303**

10/07/2017

220-240 V - 50 Hz | schuko

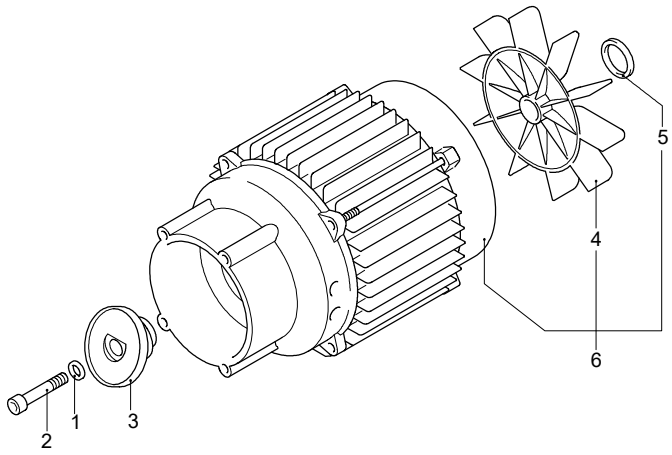

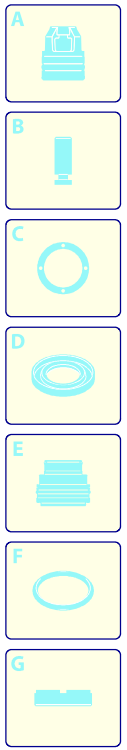

Validity	Pos.	Code	Description	Q
	1	3081750	Washer	1
	2	3081950	Screw	1
	3	3440950	Wobble plate	1
	4	3440370	Fan	1
	5	3441000	Ring	1
	6	3441180	Motor	1

UN_CE_0591-MV

ANNOVI REVERBERI
The Power of Experience

PRESTIGE S 150

Version:
Serial number:
Code: **14303**

10/07/2017

220-240 V - 50 Hz | schuko

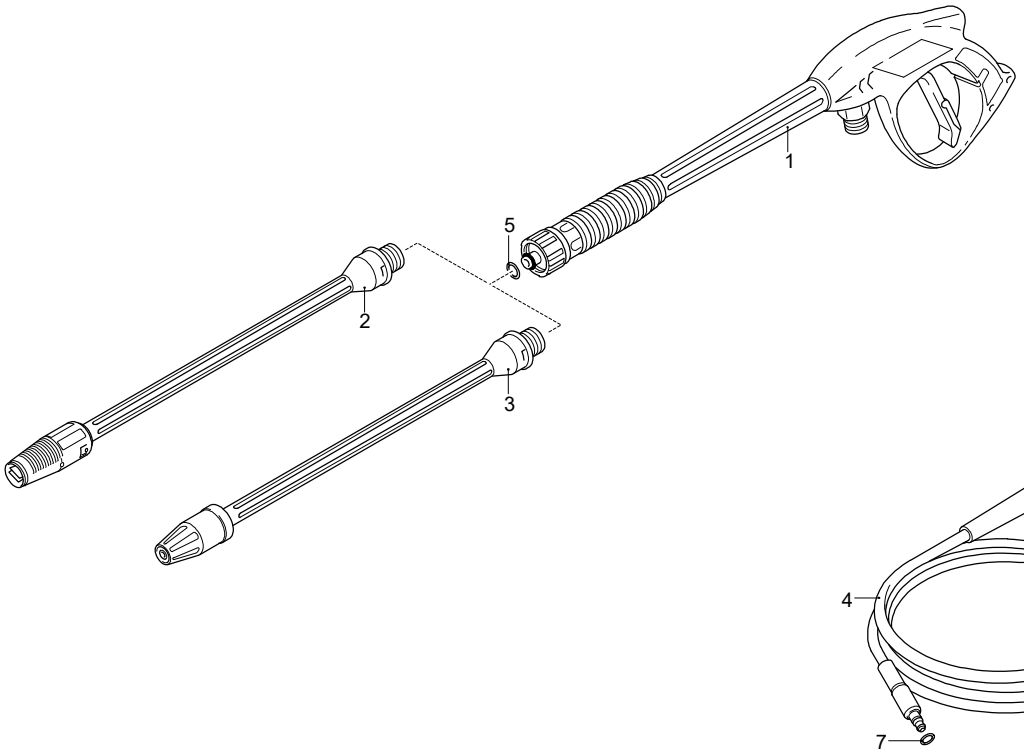

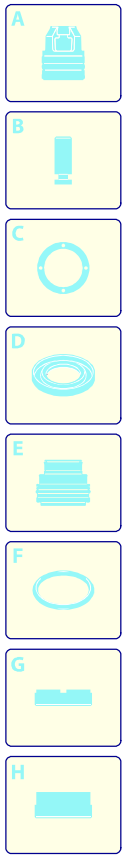

Validity	Pos.	Code	Description	Q
	1	3900180	Gun	1
	2	3900220	Lance+lance head	1
	3	3900230	Lance+rotopower	1
	4	3082100	High pressure hose	1
	5	3083690	O-ring	1
	6	3083380	O-ring	1
	7	3083400	O-ring	1

UN_CE_1326-DP