ANNOVI REVERBERI
The Power of Experience

# PRESTIGE 140

Version:
Serial number:
Code: **14302**

10/07/2017

220-240 V - 50 Hz | schuko

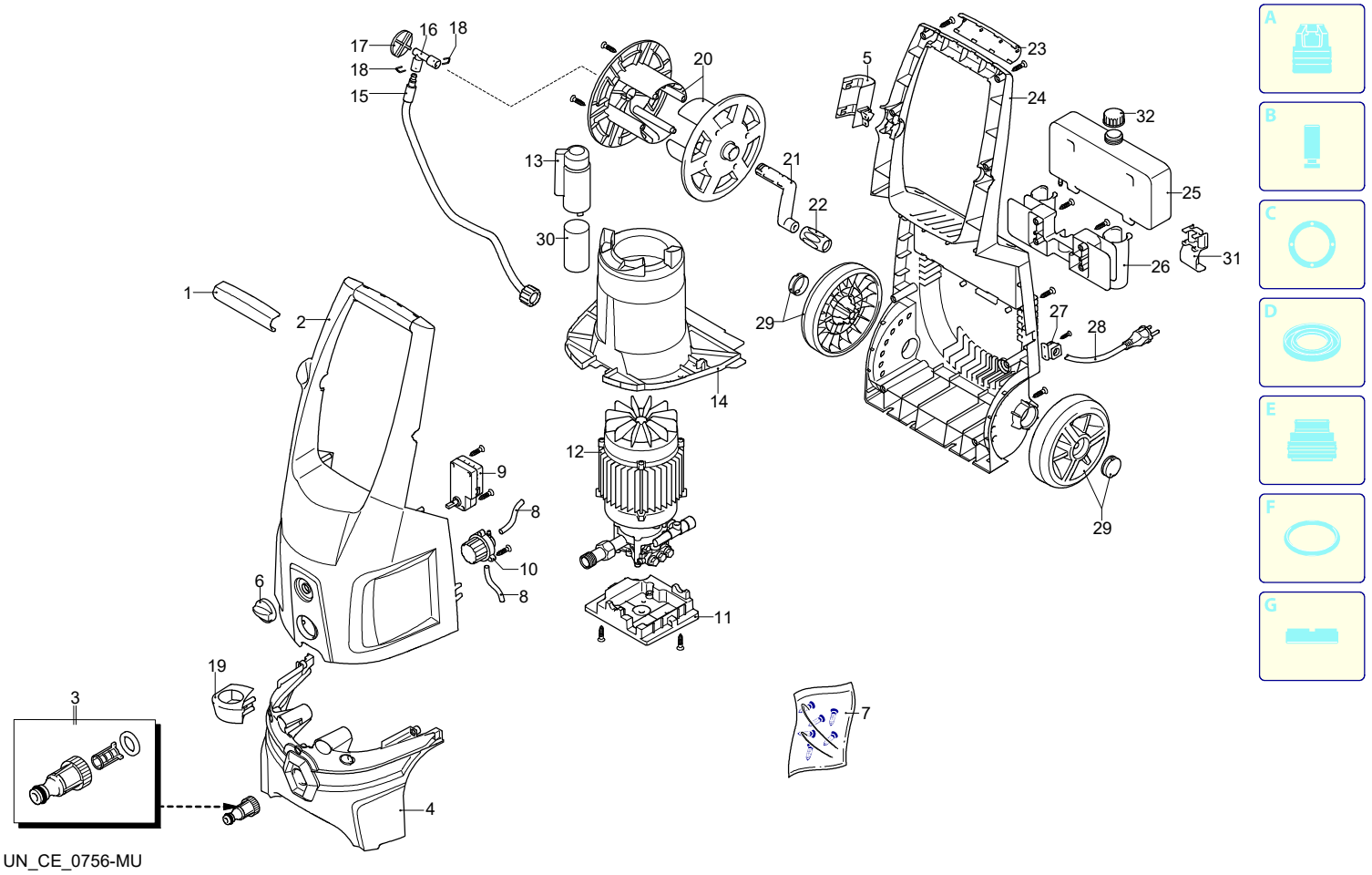


| Validity | Pos. | Code | Description | Q |
|---|---|---|---|---|
| | 1 | 3080810 | Knob | 1 |
| | 2 | 3083514 | Casing | 1 |
| | 3 | 3082130 | Water coupling kit | 1 |
| | 4 | 3083520 | Casing | 1 |
| | 5 | 3083840 | Support | 1 |
| | 6 | 3080480 | Knob | 1 |
| | 7 | 3400530 | Screw kit | 1 |
| | 8 | 3081490 | Detergent hose | 2 |
| | 9 | 3082010 | Box | 1 |
| | 10 | 3082000 | Detergent regulator | 1 |
| | 11 | 3440781 | Support | 1 |
| | 12 | 3441190 | Electric pump assembly | 1 |
| | 13 | 3081630 | Capacitor carrier | 1 |
| | 14 | 3080520 | Conveyor | 1 |
| | 15 | 3081640 | High pressure hose | 1 |
| | 16 | 3080781 | Fitting | 1 |
| | 17 | 3082970 | Plug | 1 |
| | 18 | 3081650 | Fork | 2 |
| | 19 | 3400110 | Support | 1 |
| | 20 | 3080390 | Plate | 2 |
| | 21 | 3080220 | Lever | 1 |
| | 22 | 3081063 | Knob | 1 |
| | 23 | 3080820 | Knob | 1 |
| | 24 | 3080323 | Base | 1 |
| | 25 | 3080370 | Tank | 1 |
| | 26 | 3080190 | Accessories carrier | 1 |
| | 27 | 3080580 | Cable gland | 1 |
| | 28 | 3082090 | Cable | 1 |
| | 29 | 3400562 | Wheel | 2 |
| | 30 | 3081620 | Capacitor | 1 |
| | 31 | 3081070 | Accessories carrier | 1 |
| | 32 | 3080380 | Plug | 1 |

ANNOVI REVERBERI
The Power of Experience

# PRESTIGE 140

Version:
Serial number:
Code: **14302**

10/07/2017

**220-240 V - 50 Hz** | **schuko**

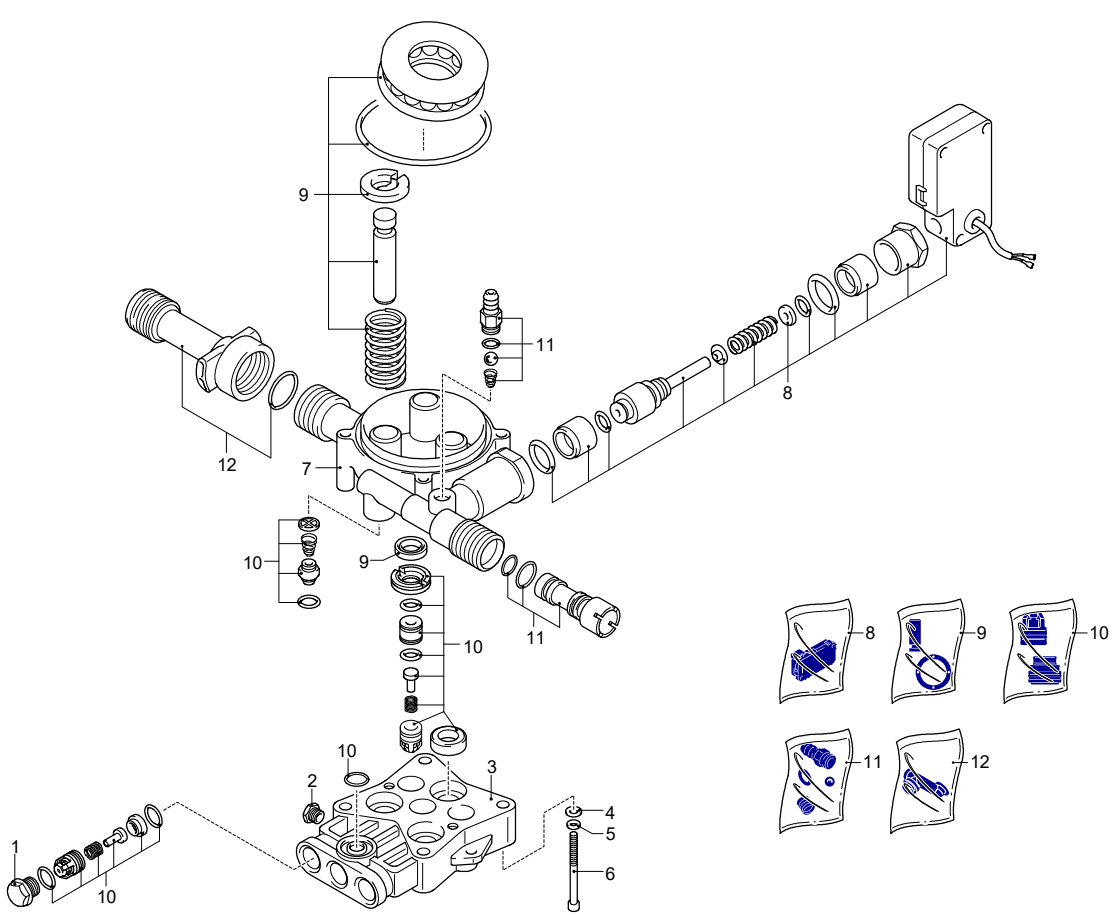





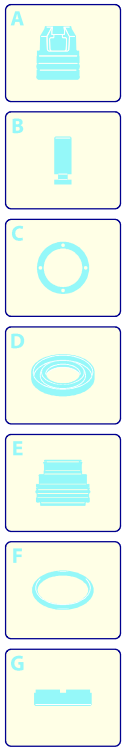


| Validity | Pos. | Code | Description | Q |
|---|---|---|---|---|
| | 1 | 3083210 | Plug | 3 |
| | 2 | 3081730 | Screw | 1 |
| | 3 | 3083220 | Head | 1 |
| | 4 | 3081760 | Washer | 4 |
| | 5 | 3081750 | Washer | 4 |
| | 6 | 3081740 | Screw | 4 |
| | 7 | 3083230 | Pump body | 1 |
| | 8 | 3440560 | TSS kit | 1 |
| | 9 | 3440570 | Piston + seals kit | 1 |
| | 10 | 3081290 | Valves + seals kit | 1 |
| | 11 | 3440610 | Detergent suction kit | 1 |
| | 12 | 3440620 | Suction kit | 1 |

UN_CE_0757-NW

ANNOVI REVERBERI
The Power of Experience

# PRESTIGE 140

Version:
Serial number:
Code: **14302**

10/07/2017

220-240 V - 50 Hz | schuko

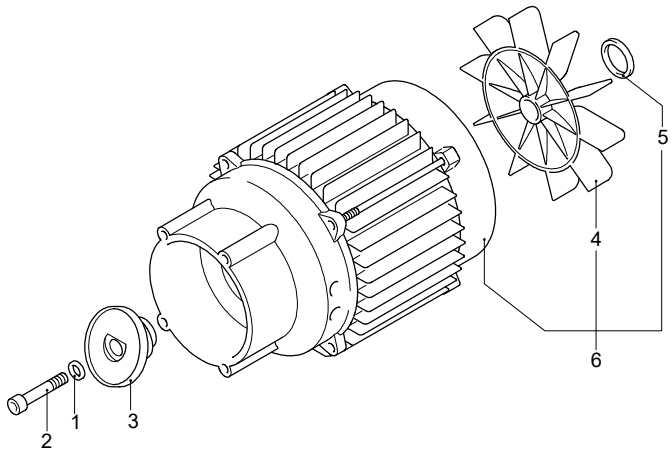


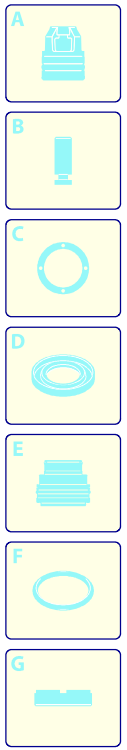


| Validity | Pos. | Code | Description | Q |
|---|---|---|---|---|
| | 1 | 3081750 | Washer | 1 |
| | 2 | 3081950 | Screw | 1 |
| | 3 | 3440950 | Wobble plate | 1 |
| | 4 | 3440370 | Fan | 1 |
| | 5 | 3441000 | Ring | 1 |
| | 6 | 3441180 | Motor | 1 |

UN_CE_0591-MV

ANNOVI REVERBERI
The Power of Experience

# PRESTIGE 140

Version:
Serial number:
Code: **14302**

10/07/2017

**220-240 V - 50 Hz** | **schuko**

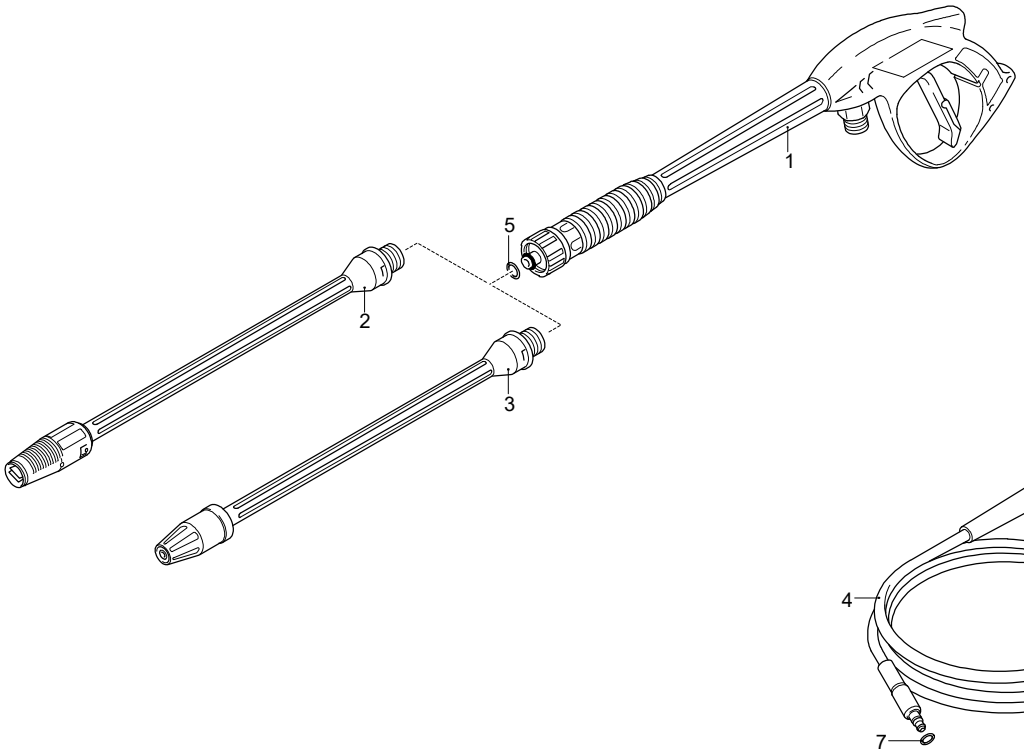


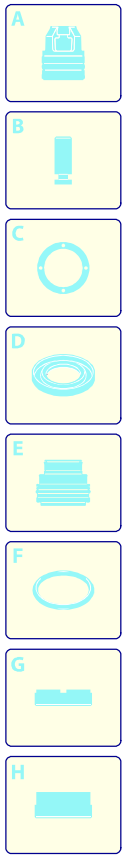


| Validity | Pos. | Code | Description | Q |
|---|---|---|---|---|
| | 1 | 3900180 | Gun | 1 |
| | 2 | 3900100 | Lance+lance head | 1 |
| | 3 | 3900190 | Lance+rotopower | 1 |
| | 4 | 3082100 | High pressure hose | 1 |
| | 5 | 3083690 | O-ring | 1 |
| | 6 | 3083380 | O-ring | 1 |
| | 7 | 3083400 | O-ring | 1 |

UN_CE_1326-DP