GENERAL PUMP *A member of the Interpump Group*

Industrial PN3

Pneumatically-Operated Pressure Regulator

INDUSTRIAL

INDUSTRIAL

FEATURES

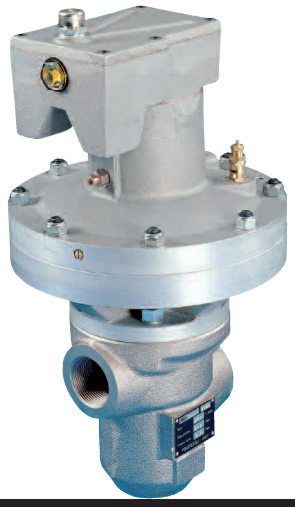

- Available in 3 versions according to pressure and volume required.
- Allows remote control of the water pressure.
- Allows off-load start up.
- When there is no air pressure water flows through the by-pass without pressure.
- No discharge leakage in bypass.
- Suitable for controlling several units at the same time,

SPECIFICATIONS

Part Number	PN3/160	PN3/240	PN3/300
Maximum Volume	132 GPM	111 GPM	79 GPM
Maximum Pressure	2350 PSI	3500 PSI	4350 PSI
Maximum Fluid Temperature	140ºF		
Inlet Port Thread	1-1/2” BSP-F		
Discharge Port Thread	1-1/2” BSP-F		
Bypass Port	1-1/2” BSP-F		
Air Inlet Port	1/4” BSP-F		
Maximum Air Pressure	95 PSIG		
Air Consumption	32 n/liter/min		
Oil Capacity - oz / (liters)	15.2 / (.450)		
Weight	55.1 lbs		
Materials	Upper Body	Aluminum Alloy	
	Lower Body	SPF600 Cast Iron	
	Valve and Valve Seat	Stellite® Coated AISI 420 SS	

Specifications are subject to change without notice.

INSTALLATION DIAGRAMS

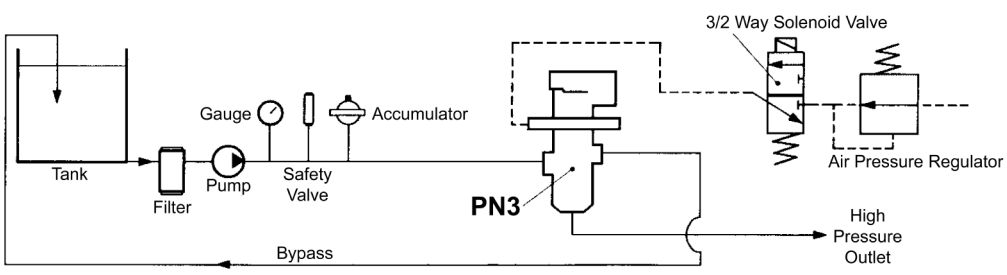

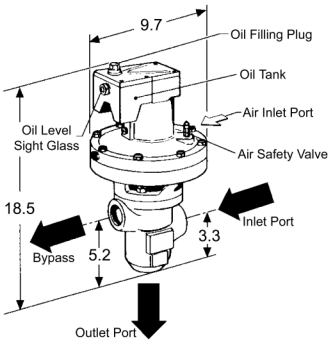

General Pump is a member of the Interpump Group

300812 Rev. E
12-11

GENERAL PUMP

OPERATION

DESCRIPTION

Control valve type **PN3** is designed for distribution of liquid delivered by the pump. Such pneumatic operated valve is to be installed directly after the pump, on the pressure line.

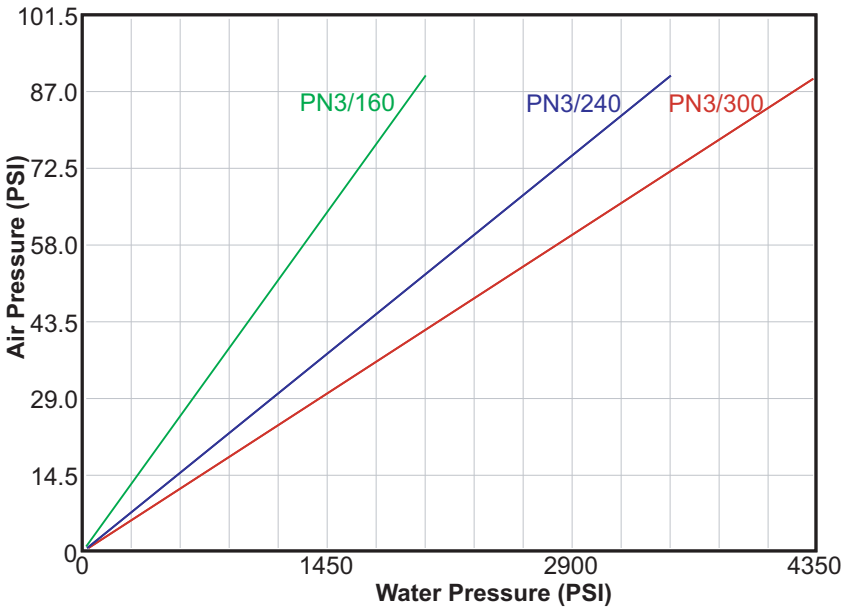

Air safety valve (pos. 55) prevents the pneumatic parts from overloads.
The air pressure required is taken from the compressed air system in the factory or on the vehicle and is directly proportional to the pump working pressure:

The compressed air can be controlled either by means of a distributor or by a three way solenoid valve. Pressure can be adjusted by means of an air pressure reducing valve.
Should the compressed air feed be interrupted, the **PN3** valve would work in by-pass mode.
The valve can be installed both vertically and horizontally.
However, always make sure the breather plug (pos. 1) is higher than the oil level in the tank (pos. 61).
Oil level should correspond to the central line of the oil indicator (pos. 61).
If the valve is to work at a temperature lower than -32ºF (0°C), appropriate precautions should be taken on the pressure line in order to prevent any freezing.

USE

Before setting the valve at work, position breather plug (pos. 1) properly over the oil tanks, replace the shipping plug used for shipment and delivery of valve only.
Before setting the pump at work. Check oil level in the tank (pos. 61) through the oil level indicator (pos. 4). If the level is too low, add oil as necessary. Use oil with a viscosity of 46 Cst at 40°C (ISO 46).

WARNING

The air safety valve (pos. 55) should never be tampered with and absolutely never be used to adjust air pressure, which, in fact, will be adjusted by means of the pressure reducer outside the valve. The breather nozzle (pos. 17) guarantees evenness in delivery without any surging, so that the nozzle should NEVER BE CLOGGED.

OPERATION

When there is no pressure in the chamber over the diaphragm (pos. 52), spring (pos. 23) will push piston (pos. 22) upwards thus connecting pump inlet and by-pass outlet while cap (pos. 36) is in its upper position and prevents from use.
When air pressure is let in, piston (pos. 22) lowers and by-pass port is progressively closed. Cap (pos. 36) will then take its lower position and allow the water to flow into the delivery line.
When air pressure is cut off again, the spring (pos. 23) will push piston (pos. 22) upwards and the valve will open its by-pass port.

USE CONDITIONS

Parts of **PN3** subject to wear are the seats (pos. 41) and the tapered valve (pos. 27).
The wear of those parts most depends on the amount of water released in by-pass. Due to nozzles not absorbing the total capacity of the pump at the required pressure.
Best use of the valve is when the nozzles absorb 95% or more of the total capacity of the pump and only 5% or less is released in by-pass. Under this condition the **PN3** valve will ensure long time trouble-free operation.

WORKING PRESSURE ADJUSTMENT

Operate on the pressure reducing valve fitted in the compressed air system as to set air pressure to a value that matches the pump working pressure (see graphic this page), then start the pump.
If the way the pump is operated allows regulation of the engine speed, the number of rpm should gradually increase until the pump pressure gauge reaches the required working pressure.
Do not increase rpm any further, since the greater capacity originating from said increase would have to be drained out of the valve under pressure, thus increasing wear on the seat and tapered valve.
When you cannot vary the engine rpm, then vary the nozzle size (diameter) until no water or a very few is released through the by-pass.

INDUSTRIAL

PARTS LIST

Pos	Part Number	Description	Qty
KIT	*F1245*	*Repair Kit*	*1*
1	F801054002	Vented Cap G 1/2”	1
2	F881011153	OR Ø 18x3 KIT F1245	1
3	F871121153	SHCS M8x25	4
4	F801053002	Oil Level Sight Glass G 1/2”	1
5	F084390010	Plug G 1/2”	1
6	F872043002	Washer, Alum Ø 1/2”	1
7	F091300000	Orifice 70	1
8	F872012056	Ny-lok Nut M16	1
9	F020300000	Piston	1
10	F881010300	OR Ø 56.52x5.34 - Spec. KIT F1245	1
11	F080600150	Gasket, Cylinder	1
12	F021300150	Guide Bushing	1
13	F872040002	Washer Ø 10	2
14	F872040300	Washer Ø 6 KIT 1245	2
15	F871115150	SHCS M6x10	2
16	F084200020	Nipple	2
17	F091300020	Orifice 40	1
18	F872010053	Ny-lok Nut M10 SS	8
19	F033300040	Diaphragm Support Ring	1
20	F030300060	Diaphragm Plate	1
21	F881011152	OR Ø 24x3 KIT 1245	1
22	F074200070	Control Rod	1
23	F090000020	Spring, Aperture Valve	1
24	F881063160	Scraper Support Ø 45 KIT F1245	1
25	F871125111	SHCS M10x55	8
26	F881014201	OR Ø 37.69x3.53 - Spec. KIT F1245	1
27	F36342666	Pad, ValvePN3/160	1
	F36344266	Pad, Valve PN3/240	1
	F36344366	Pad, Valve PN3/300	1
28	F031200260	Support, Pad, Valve	1
29	F021200180	Sleeve	1
30	F881112005	Support, OR KIT F1245	1
31	F881011158	OR Ø 40x3 - Spec. KIT F1245	1
32	F872000156	Nut M12 h12	4
33	F872046056	Washer Ø 12	4
34	F871333102	Stud M12x30	4
35	F060100280	Body, Valve	1
36	F082500000	Plate KIT F1245	1
37	F872010503	Ny-lok Nut M10 SS	1
38	F030200020	Washer, Bottom	1
39	F030200010	Washer, Upper	1
40	F871111100	SHCS M5x10	1
41	F36342966	Seat, Valve PN/160	1
	F36344466	Seat, Valve PN3/240	1
	F36344566	Seat, Valve PN3/300	1
42	F881011162	OR Ø 59x3 KIT F1245	1
43	F074200060	Control Rod, Lower	1
44	F881010104	OR Ø 12.37x2.62 KIT F1245	1
45	F881112006	Support, OR KIT 1245	2
46	F021300220	Bushing	1
47	F881011151	OR Ø 22x3 - Spec. KIT F1245	1
48	F070400020	Flange, Intermediate	1
49	F031200370	Scraper	1
50	F872010501	Ny-lok Nut M6 SS	6
51	F010100130	Support, Diaphragm	1
52	F080500000	Diaphragm	1
53	F871014508	SHCS M6x25 SS	6
54	F062400010	Cylinder	1
55	F801076000	Safety Valve G 1/4”	1
56	F881010204	OR Ø 24.99x3.53 KIT F1245	2
57	F021000000	Guide, Spring	1
58	F090000010	Spring, Piston KIT F1245	1
59	F082000000	Poppet, Valve, Piston KIT F1245	1
60	F081000000	Seat, Valve, Piston KIT F1245	1
61	F061400010	Oil Reservoir	1
62	F091300010	Orifice 100	1
63	F080600160	Gasket, Cover	1
64	F063400800	Cover, Reservoir	1
65	F871115104	SHCS M6x18	6

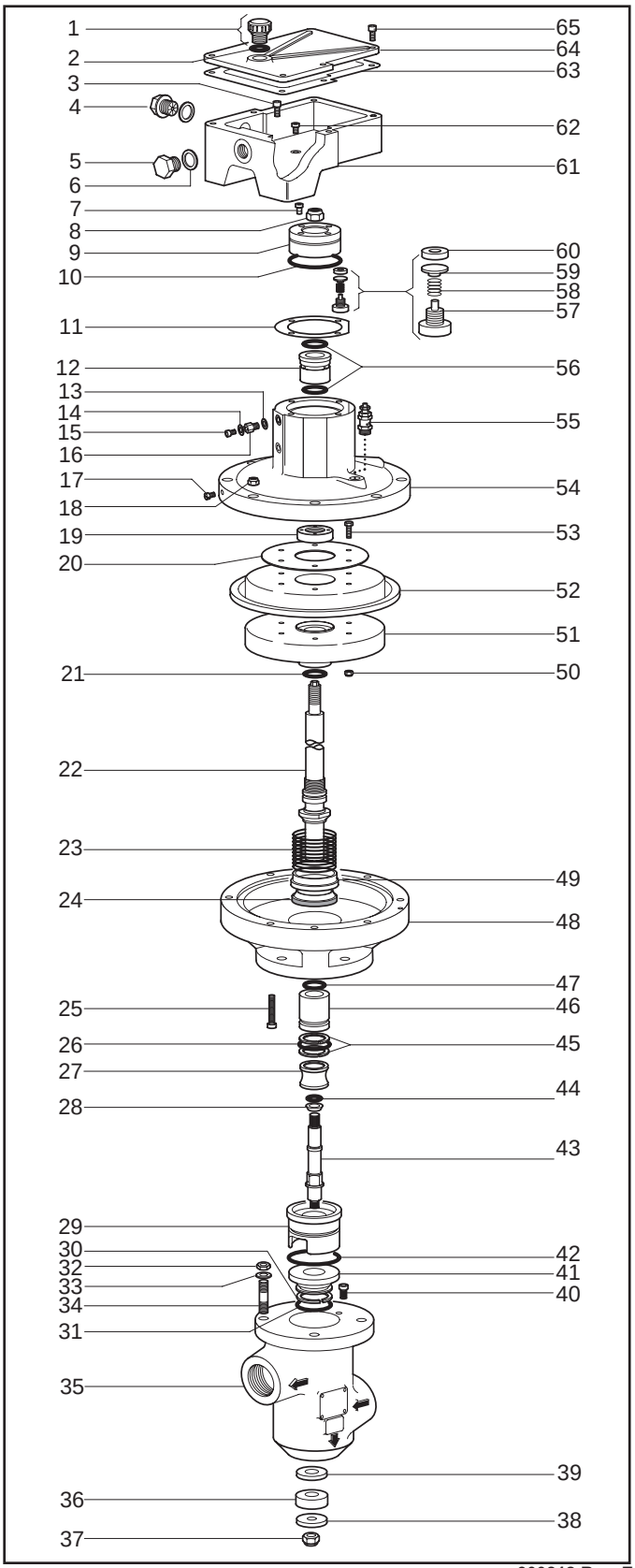

INDUSTRIAL

MAINTENANCE

The only maintenance required for PN3 valve is the periodical check of the oil level in the oil tank (pos. 61).

Use the following chart to source the proper lubricant for this valve.

Manufacturer	Type
Mobil (Preferred)	**Mobil DTE 25**
Shell	Tellus S.46
Total	Azolla ZS.46
Texaco	Rando HD.46
Fina	Hydran 46
B.P.	Energol HLP 46
Chevron	EP. Hydraulic 46
Gulf	Armony 48-AW
IP	Hydrus X46
Agip	OSO 46
Esso	Nuto H 46

SELECTION

Chart for selection of the correct PN3 valve according to the pump being used.

KL Pumps	KL30	PN3/300
	KL33	PN3/300
	KL36	PN3/240
	KL40	PN3/240
	KL45	PN3/240
	KL50	PN3/240
MS Pumps	MS 36	PN3/300
	MS 40	PN3/240
	MS 45	PN3/240
	MS 50	PN3/160
	MS 55	PN3/160
MH Pumps	MH 45	PN3/300
	MH 50	PN3/300
	MH 55	PN3/240
	MH 60	PN3/240
	MH 65	PN3/160
LH Pumps	LH 40	PN3/300
	LH 45	PN3/240
	LH 50	PN3/240
	LH 55	PN3/160
	Lh 60	PN3/160

Notes:

INDUSTRIAL

INDUSTRIAL