PN SERIES DIMENSIONS

WEIGHT	13 LBS
LUBRICATION	10 OZ UDOR LUBE

Dimensional Drawings are Shown in Millimeters. To Convert to Inches, Multiply Dimension x 0.03937

PN SERIES PUMPS - 3/4" HOLLOW SHAFT w/ GAS ENGINE FLANGE

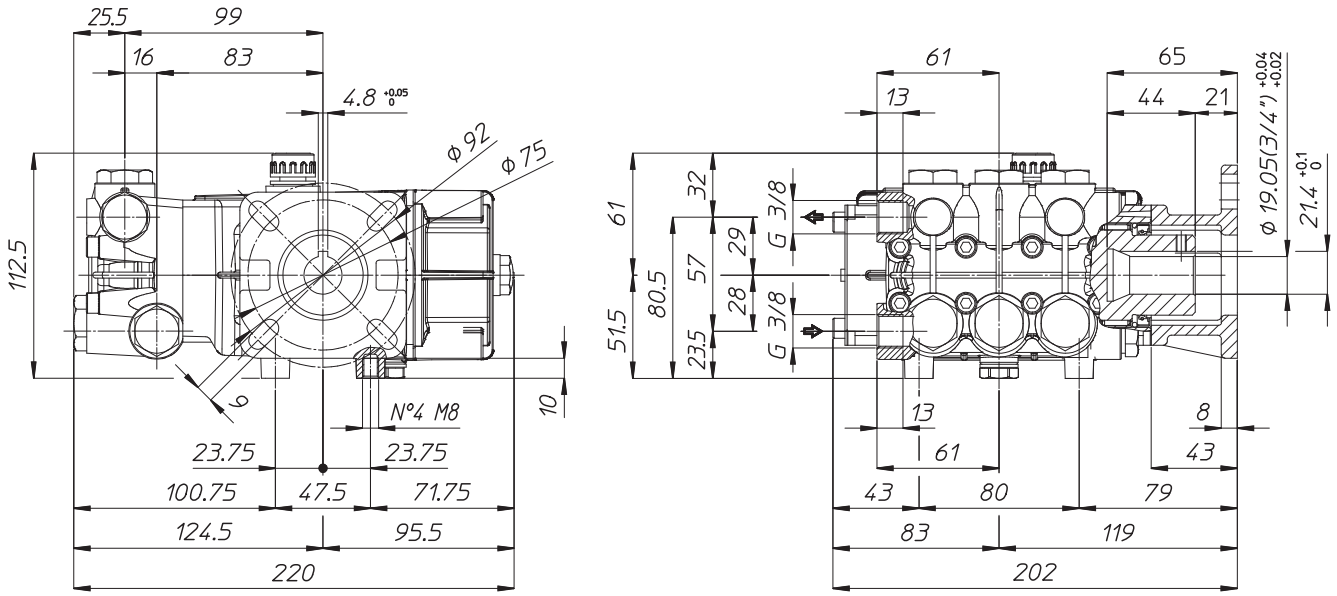

TORQUE SPECS

Ref.	Description	Ft./lb.	Nm	Loctite®
1	Head Bolts	8	11	-
2	Valve Caps	75	100	243
3	Inlet Cap	60	80	-
4	Outlet Cap	60	80	243
5	Bearing Flange Bolts	8	11	-
6	Rear Cover Bolts	8	11	-
7	Connecting Rod Bolts	-	-	-
8	Plunger Bolts	11	15	270
9	Valve Cover Bolts	-	-	-
10	Oil Drain Plug	6	8	-

