PKC 09/20 S

MAX OUTPUT	2.4 GPM / 9.0 L/MIN
MAX OUTPUT	2900 PSI / 200 BAR
RATED PUMP SPEED	1450 RPM
POWER REQUIREMENT	4.6 HP ELECTRIC
LUBRICATION	11.5 OZ UDOR LUBE

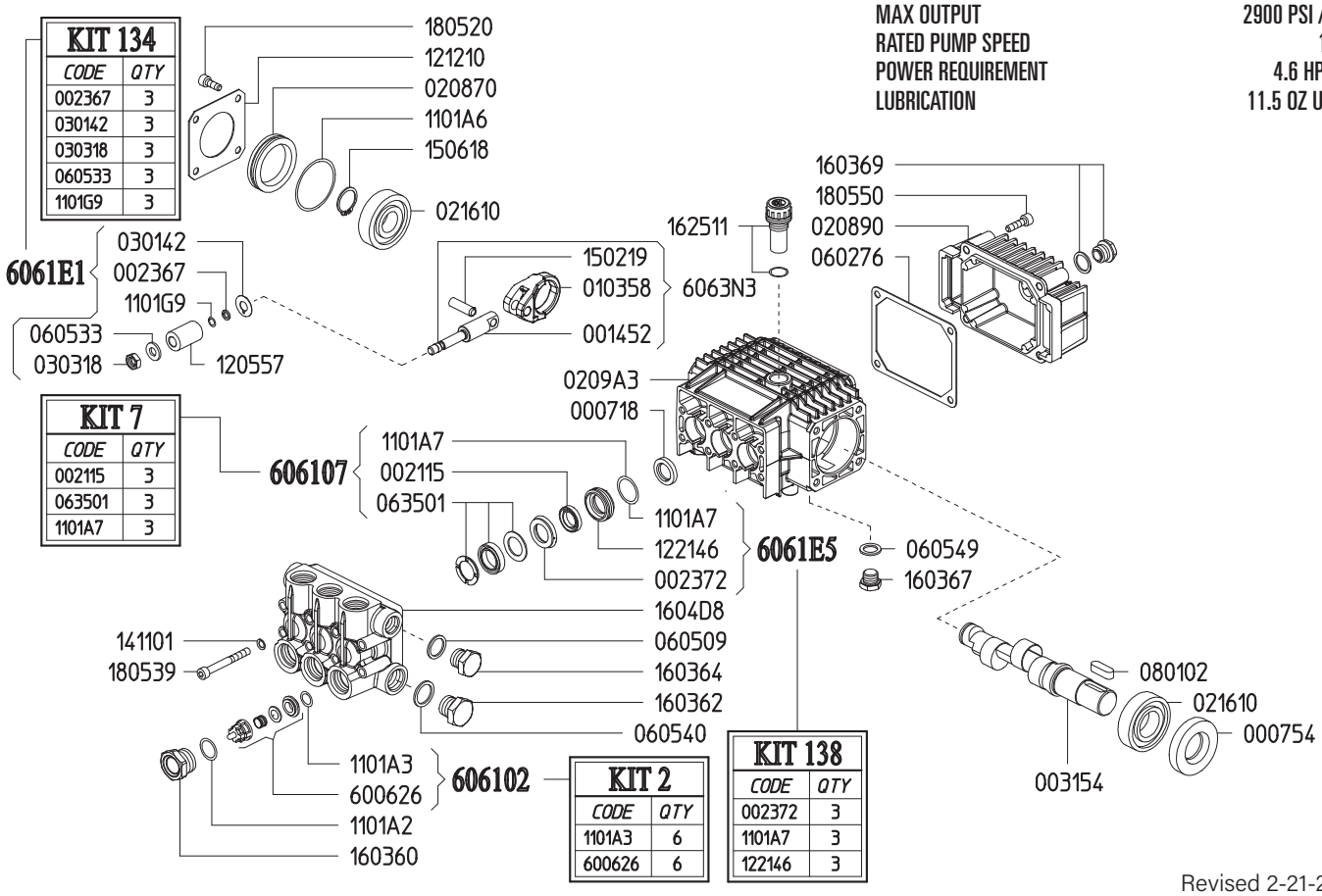

Revised 2-21-2022

Part #	Description	Qty
0007.18	OIL SEAL D15X24X5	3
0007.54	OIL SEAL D25X52X10	1
0014.52	PLUNGER GUIDE D15/18	3
0021.15	WATER SEAL L.P. D15 [C]	3
0023.67	RING D5.2X8X1.3 [B]	3
0023.72	UPPER RING D15 [D]	3
0031.54	MALE SHAFT D24	1
0103.58	CONNECTING ROD	3
0208.70	COVER	1
0208.90	BACK COVER - DEEP	1
0209.A3	CRANKCASE	1
0216.10	ROLLER BEARING D25	2
0301.42	DISC [B]	3
0303.18	NUT M8XH5 [B]	3
0602.76	BACK COVER GASKET	1
0605.09	GASKET D17X23X1.5 (G3/8)	1
0605.33	GASKET D8X14X2 [B]	3
0605.40	GASKET D21.5X27X1.5 (G1/2) ALL	1
0605.49	GASKET D13X19X1.5	1
0635.01	HIGH PRESSURE SEAL KIT D15 [C]	3
0801.02	KEY A8X7X25	1
1101.A2	O-RING - VALVE CAP	6
1101.A3	O-RING - VALVE [A]	6
1101.A6	O-RING - BEARING COVER	1
1101.A7	O-RING - PRESSURE RING [C D]	3
1101.G9	O-RING - PLUNGER GUIDE [B]	3

Part #	Description	Qty
1205.57	CERAMIC PLUNGER D15	3
1212.10	METAL COVER	1
1221.46	PRESSURE RING D15 [D]	3
1411.01	SERATED WASHER D6	8
1502.19	PIN D8X26	3
1506.18	SNAP RING D25	1
1603.60	VALVE PLUG PISTON D15/18/20	6
1603.62	PLUG G1/2	1
1603.64	PLUG G3/8	1
1603.67	PLUG G1/4	1
1603.69	OIL PLUG G1/4+GASKET	1
1604.D8	HEAD PISTON D15/18	1
1625.11	OIL PLUG G3/8	1
1805.20	ALLEN BOLT M6X16	4
1805.39	ALLEN BOLT M6X60	8
1805.50	ALLEN BOLT M6X35	4
6006.26	VALVE ASSEMBLY W/O O-RING [A]	6
6063.N3	COMPLETE ROD ASSEMBLY D15/18	3
6061.02	VALVE KIT (KIT 2)	
6061.07	WATER SEAL KIT D15 (KIT 7)	
6061.E1	PLUNGER KIT D18 (KIT 134)	
6061.E5	BRASS RING KIT D15 (KIT 138)	

[A] Parts in 6061.02 (Kit 2).
[B] Parts in 6061.E1 (Kit 134).
[C] Parts in 6061.07 (Kit 7).
[D] Parts in 6061.E5 (Kit 138).

PK SERIES DIMENSIONS

WEIGHT	14 LBS
LUBRICATION	11.5 OZ UDOR LUBE

Dimensional Drawings are Shown in Millimeters. To Convert to Inches, Multiply Dimension x 0.03937

PK SERIES PUMPS - 24MM SOLID SHAFT

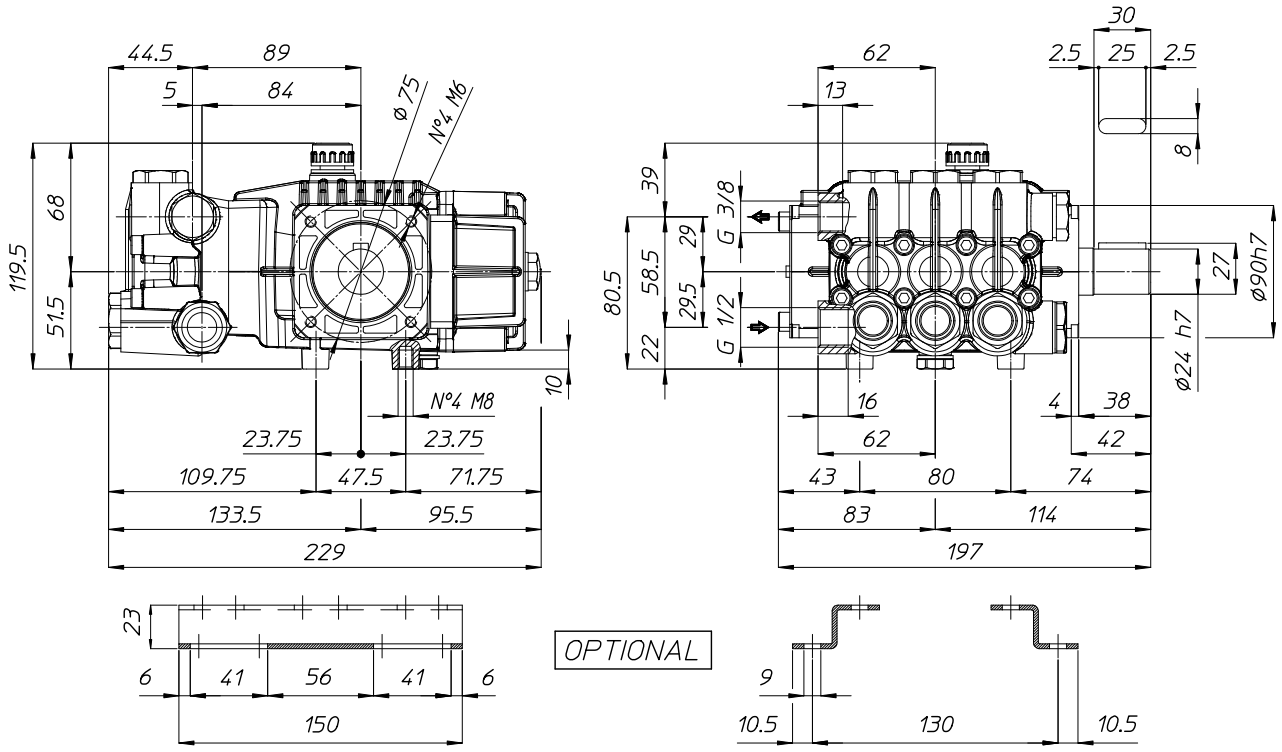

TORQUE SPECS

Ref.	Description	Ft./lb.	Nm	Loctite®
1	Head Bolts	8	11	-
2	Valve Caps	75	100	243
3	Inlet Cap	80	110	-
4	Outlet Cap	60	80	243
5	Bearing Flange Bolts	8	11	-
6	Rear Cover Bolts	8	11	-
7	Connecting Rod Bolts	-	-	-
8	Plunger Bolts	11	15	270
9	Valve Cover Bolts	-	-	-
10	Oil Drain Plug	6	8	-

