BE POWER® EQUIPMENT

COMMERCIAL AIR SCRUBBER

USER MANUAL

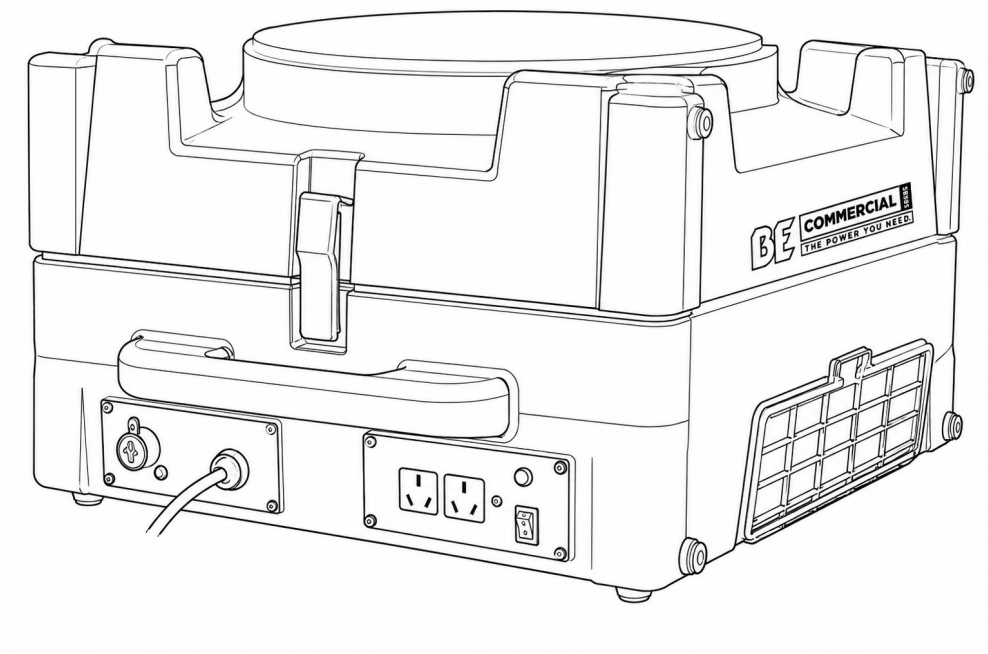

MODEL NO. PIN CAS750

V1.0 2026

CONTENTS

INTRODUCTION 3
SPECIFICATIONS 4
OPERATION 5
MAINTENANCE 7
PARTS LIST 9

PLEASE READ AND SAVE THESE INSTRUCTIONS

INTRODUCTION

Thank you for choosing the BE Power Equipment Air Scrubber.

Designed for professional restoration, remediation and indoor air quality applications, the Air Scrubber is a compact, lightweight and highly portable filtration system that delivers powerful air cleaning performance while consuming minimal power.

With a compact footprint of 560 × 600 mm, a height of just 350 mm, and a weight of less than 15.5 kg, the Air Scrubber is easy to transport, position and store. The integrated carry handle and stackable housing make it ideal for contractors working across multiple job sites.

For maximum versatility, the Air Scrubber features variable airflow control and can be operated in either a vertical or horizontal position. It is compatible with 400 mm inlet flexible ducting and 250 mm lay-flat outlet ducting, allowing it to be configured for a wide range of restoration and containment applications.

The Air Scrubber delivers up to 1,300 m^3/h of HEPA-filtered airflow while drawing less than 2 amps of power, making it ideal for environments where available power and working space are limited.

At maximum airflow, a single Air Scrubber is capable of providing approximately four air changes per hour (ACH) in an enclosed space of up to 212 m^3, meeting the minimum air change rate commonly recommended for many restoration and remediation applications.

The Air Scrubber features a two-stage filtration system incorporating a True HEPA filter, designed to capture fine airborne particles including dust, mould spores and other contaminants. An optional activated carbon/potassium permanganate filter is available to help reduce a wide range of airborne odours, volatile organic compounds (VOCs) and certain gases.

Designed for durability, portability and reliable performance, the BE Power Equipment Air Scrubber is an ideal solution for water damage restoration, mould remediation, construction dust control and general indoor air quality improvement.

SPECIFICATIONS

Part No.:	CAS750
Power:	220-240 Vac, 1.9 Amps
Blower:	1,300 m³/h
Filters:	1st stage 2.5cm Pleated Media, 45 x 45 (optional) 2.5cm
	Carbon and Potassium Permanganate
	2nd stage 6.3cm Pleated HEPA 45 x 45cm
Warranty:	One Year, 100% Parts and Labor
Dimensions:	Width 55cm
	Height 34cm
	Depth 63cm
Weight:	15.5 kgs

SAFETY INFORMATION

⚠ WARNING - Risk of Electric Shock

Failure to follow these instructions may result in electric shock, serious injury or death.

To reduce the risk of electric shock:

- Do not expose the unit to rain, standing water or excessive moisture.
- Connect the unit only to a properly earthed power outlet protected by a Residual Current Device (RCD) or Ground Fault Circuit Interrupter (GFCI) where required.
- Do not use an extension lead or power board unless it is suitable for the electrical load and fully unwound.
- Always disconnect the unit from the power supply before servicing, cleaning or replacing filters.
- Do not block or obstruct the air inlet or air outlet. Maintain a minimum clearance of 300 mm (12 in.) around all air openings.
- This appliance is intended for indoor use only.
- Do not stand, sit or place heavy objects on the unit.
- Do not operate the unit if the power cord or plug is damaged. If the supply cord is damaged, it must be replaced by the manufacturer, an authorised service agent or a similarly qualified person.
- Do not route the power cord beneath carpets, rugs, furniture or appliances.
- Position the power cord where it will not be damaged or create a trip hazard.

Failure to follow these safety instructions may result in personal injury, damage to the equipment or reduced operating performance.

OPERATION

Transporting the Air Scrubber

The Air Scrubber may be transported or operated in either a vertical or horizontal position. Always place the unit on the designated support feet located on the base or the side opposite the carry handle. When transporting the unit, ensure it is secured to prevent movement and avoid subjecting it to excessive impact.

Electrical Requirements

The Air Scrubber is designed to operate from a **220–240 V, 50 Hz** single-phase power supply connected to a properly earthed **10 A** outlet. With clean filters and no ducting connected, the unit draws approximately 2 amps. Power consumption may decrease slightly as filters become loaded or when ducting is fitted. For models equipped with an integrated **Residual Current Device (RCD)** or **Ground Fault Circuit Interrupter (GFCI)**, the unit should be connected directly to a wall outlet.
Do not use extension leads or power boards unless they are suitably rated for the electrical load.

Air Ducting

A. Inlet Ducting
Where the contaminated area is difficult to access or the Air Scrubber cannot be positioned inside the work area, flexible ducting may be connected to the air inlet.
The Air Scrubber is designed to accept 400 mm diameter flexible inlet ducting.
To install the duct:

1. Position the wire support of the flexible duct over the inlet collar.
2. Work the wire progressively around the collar until the duct is fully secured.
3. Check that the duct is firmly attached before operating the unit.

The duct can be removed after use for easier transport and storage.
400 mm flexible ducting is available from BE Power Equipment.

B. Outlet Ducting
The Air Scrubber is supplied with a removable outlet adaptor designed to suit 250 mm lay-flat ducting.
To install the outlet duct:

1. Press the release tab at the top of the outlet grille and remove the outlet adaptor.
2. Feed the end of the lay-flat duct through the inside of the adaptor.
3. Fold the end of the duct back over the outside of the adaptor.
4. Refit the adaptor securely onto the outlet grille.

250 mm lay-flat ducting is available from BE Power Equipment.

C. Negative Air Operation
The Air Scrubber can be used as a negative air machine by ducting the filtered exhaust air outside the work area. Exhausting filtered air from an enclosed space creates a slight negative air pressure, helping to prevent airborne dust, mould spores and other contaminants from escaping into surrounding areas. Negative pressure causes replacement air to enter through doors, windows and other openings, helping to contain airborne contaminants within the work area. For maximum effectiveness, ensure all duct connections are secure and that the exhaust duct is routed safely to an appropriate discharge location.

OPERATION

⚠ WARNING – Negative Air Applications

WARNING: Using the Air Scrubber to exhaust excessive amounts of air from an enclosed space containing fuel-burning appliances (such as gas heaters, furnaces, fireplaces or hot water systems) may cause backdrafting.

Backdrafting can draw hazardous combustion gases, including carbon monoxide, back into the occupied space, creating a risk of serious injury or death.
When operating the Air Scrubber in areas containing open combustion appliances, use one of the following methods:

A. Air Filtration Only (Recommended)
Operate the Air Scrubber as a recirculating air filtration unit without exhausting air from the room. This prevents the creation of negative air pressure and eliminates the risk of backdrafting.

B. Limited Negative Air
Operate the Air Scrubber with only a small amount of exhaust airflow so that negative pressure does not cause combustion appliances to backdraft.
Important: Before and during operation, verify that all combustion appliances are operating safely and that no backdrafting is occurring.

C. Positive Pressure Protection
Where practical, direct the filtered exhaust air into the room containing the combustion appliance(s). This creates a slight positive air pressure, helping to prevent combustion gases from being drawn back into the room.

Important: After the Air Scrubber has been started, always confirm that all combustion appliances are operating correctly and that backdrafting is not occurring.

Power and Fan Speed Control

The Power/Fan Speed Control is located on the control panel. Turning the control clockwise switches the Air Scrubber on and allows the airflow to be adjusted from Low to High speed. Occasionally, the impeller fan may not start immediately when the control is set to the lowest speed. If this occurs:

1. Turn the speed control to the High position until the impeller begins rotating.
2. Once the fan is operating normally, reduce the speed to the desired setting.

WARNING – Filter Removal

WARNING: Never remove the HEPA filter or open the cabinet while the Air Scrubber is operating. The rotating impeller fan can cause serious injury.
Always:

- Switch the unit **OFF.**
- Disconnect the power supply.
- Wait until the impeller has come to a complete stop.
- Only then remove or replace the filters.

Always ensure all filters and covers are correctly installed before reconnecting the power supply and restarting the unit.

MAINTENANCE

⚠ WARNING - Filter Replacement

WARNING: Exercise extreme care when removing or replacing filters. Depending on the application, the filters may contain hazardous dust, mould spores, asbestos fibres or other contaminants.

Always wear appropriate personal protective equipment (PPE) when handling used filters. Dispose of used filters in accordance with all applicable local regulations. If you are uncertain how to dispose of contaminated filters safely, consult an occupational hygienist or your local waste disposal authority.

Air Filtration System

The Air Scrubber is fitted with a two-stage filtration system designed to progressively remove airborne contaminants.
The standard filter arrangement consists of:

Stage 1 – Pre-Filter
- Pleated synthetic pre-filter
- MERV 7 rating
- Approximately 25–30% efficiency (ASHRAE 52.1-1992)
- Captures larger dust particles and extends the service life of the HEPA filter.

Stage 2 – HEPA Filter
- Certified True HEPA filter
- 99.97% efficiency at 0.3 microns
- Removes fine airborne particles including dust, mould spores and other contaminants.

An optional Activated Carbon / Potassium Permanganate Filter is also available to assist with the reduction of odours, volatile organic compounds (VOCs) and certain gases.

Filter Inspection

Inspect all filters regularly. Dirty filters will reduce airflow and filtration efficiency; however, they will not damage the Air Scrubber. Although the unit can continue operating with heavily loaded filters, reduced airflow will decrease the number of air changes per hour and extend the time required to clean the air within the work area.

Filter Replacement

The Air Scrubber is equipped with a Filter Change Indicator. When the amber Filter Change light illuminates:
1. Remove any inlet or outlet ducting.
2. Operate the unit on High speed.
3. If the indicator remains illuminated, replace the pre-filter.
4. Restart the unit on High speed.
5. If the indicator remains illuminated after replacing the pre-filter, replace the HEPA filter to restore maximum airflow and filtration performance.

MAINTENANCE (Continued)

Airflow Performance

With clean filters installed and no ducting connected, the Air Scrubber delivers an airflow of approximately 1,300 m^3/h. As the filters become loaded with dust and debris, airflow will gradually decrease. Although the Air Scrubber can continue operating safely with dirty filters, reduced airflow lowers the rate at which airborne contaminants are removed from the environment. For example:

- 1,300 m^3/h provides maximum filtration performance.
- 425 m^3/h provides approximately 50% of the original air cleaning capacity.

The decision to replace filters should balance operating costs with the required level of air filtration for the application.

For the most economical operation, replace filters in the following order:

1. Pre-Filter
2. HEPA Filter (only when required)

Replacing the pre-filter at regular intervals will maximise the service life of the HEPA filter and help maintain optimum airflow.

Replacing the HEPA Filter

Always replace the pre-filter first, as it is the least expensive filter and is designed to protect the HEPA filter. After replacing the pre-filter, operate the Air Scrubber on High speed and check the airflow.

- If airflow has returned to an acceptable level, no further filter replacement is required.
- If airflow remains below the desired level, replace the HEPA filter.

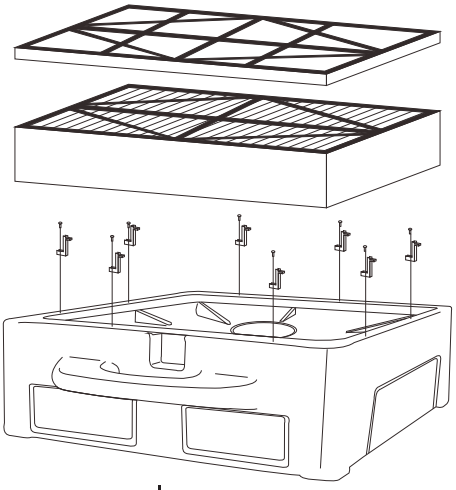

HEPA Filter Replacement

1. Switch the Air Scrubber OFF and disconnect it from the power supply.
2. Loosen each of the eight retaining screws by approximately one full turn.
3. Rotate the eight retaining clips away from the filter.
4. Carefully remove the used HEPA filter.
5. Install the new HEPA filter, ensuring it is correctly seated and sealed.
6. Rotate the retaining clips back into position and tighten the retaining screws evenly.
7. Reconnect the power supply and confirm the unit is operating correctly.

Optional Activated Carbon/Potassium Permanganate Filter

An optional Activated Carbon / Potassium Permanganate Filter is available for applications requiring the removal of airborne odours and gaseous contaminants. This filter uses a specially formulated blend of activated carbon and potassium permanganate to remove a broad range of airborne contaminants.

Typical Applications:

- Fire and smoke restoration
- Odour control
- VOC (Volatile Organic Compound) reduction
- General indoor air quality improvement

PARTS LIST

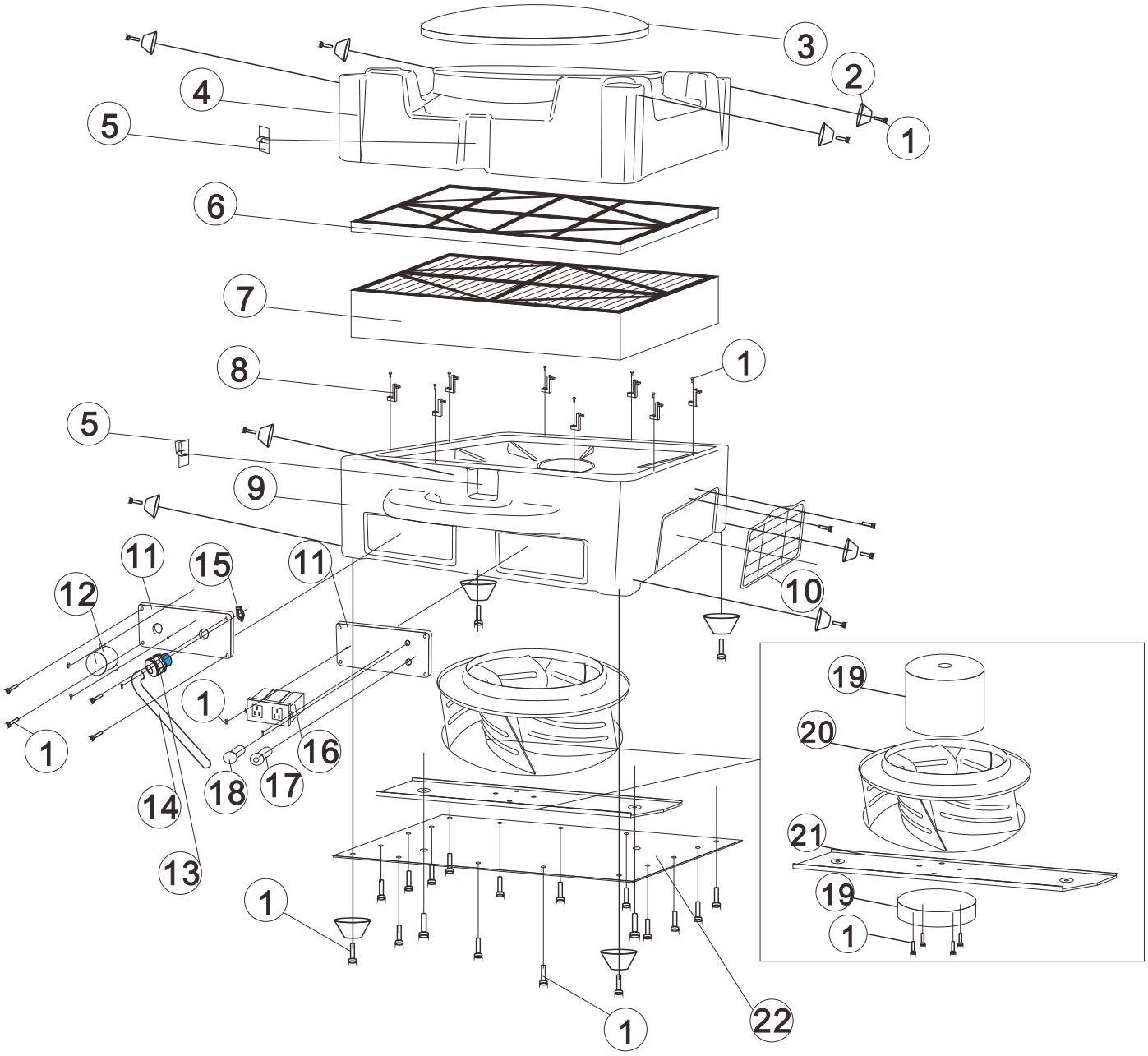

REF #	DESCRIPTION	QTY
1	Screw	46
2	Rubber Foot	12
3	Removable Foam Cap	1
4	Upper half shell	1
5	Buckle	2
6	Primary efficiency filter	1
7	High efficiency filter	1
8	Fixed Buckle	8
9	Lower half shell	1
10	Larger and wider air outlet	1
11	Switch panel/GFCI panel	1

REF #	DESCRIPTION	QTY
12	On/off rocker switch, blk	1
13	Strain relief-lq tight	1
14	Power Cord	1
15	Nut hex	1
16	GFCI outlet, female plug	1
17	Circuit breaker	1
18	Filter net plug alarm lamp	1
19	AC Motor	1
20	Fan blade	1
21	Fixed plate	1
22	Bottom cover plate	1

DISTRIBUTED IN AUSTRALIA BY



B.A.R Group P/L
15 Hudson Place,
Mulgrave, NSW, Australia 2756
Phone: 02 4577 2144
www.bargroup.au

DISTRIBUTED IN NEW ZEALAND BY

BE POWER® EQUIPMENT

BE Pressure Supply
541D Te Rapa Road, Te Rapa,
Hamilton 3200, New Zealand
Phone: 07 849 0000
www.bepressure.co.nz

Errors and omissions excepted.
Specifications and performance may change.