ANNOVI REVERBERI
The Power of Experience

Modello PG 3100 P

Version:
Serial number:
Code: **52054**

19/03/2020

230 V - 50 Hz | **schuko**

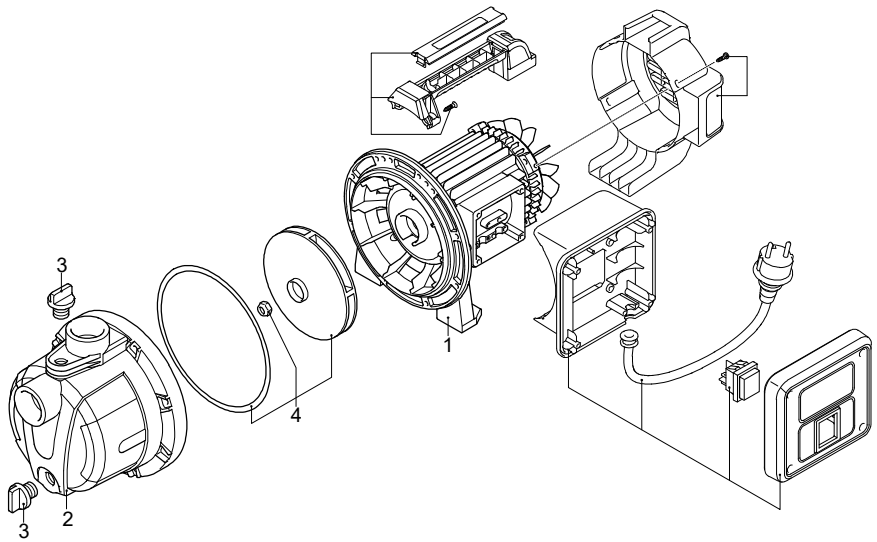

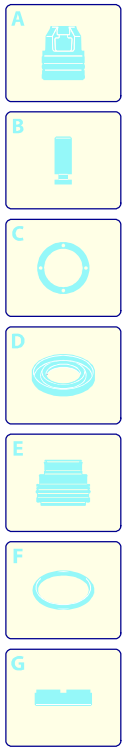

Validity	Pos.	Code	Description	Q
	1	4540850	Motor	1
	2	4540990	Head	1
	3	4540640	Plug	2
	4	4540760	Impeller	1

UN_CE_2645-LL