ANNOVI REVERBERI
The Power of Experience

Modello PG 3100 PB

Version:
Serial number:
Code: **52055**

19/03/2020

230 V - 50 Hz | **schuko**

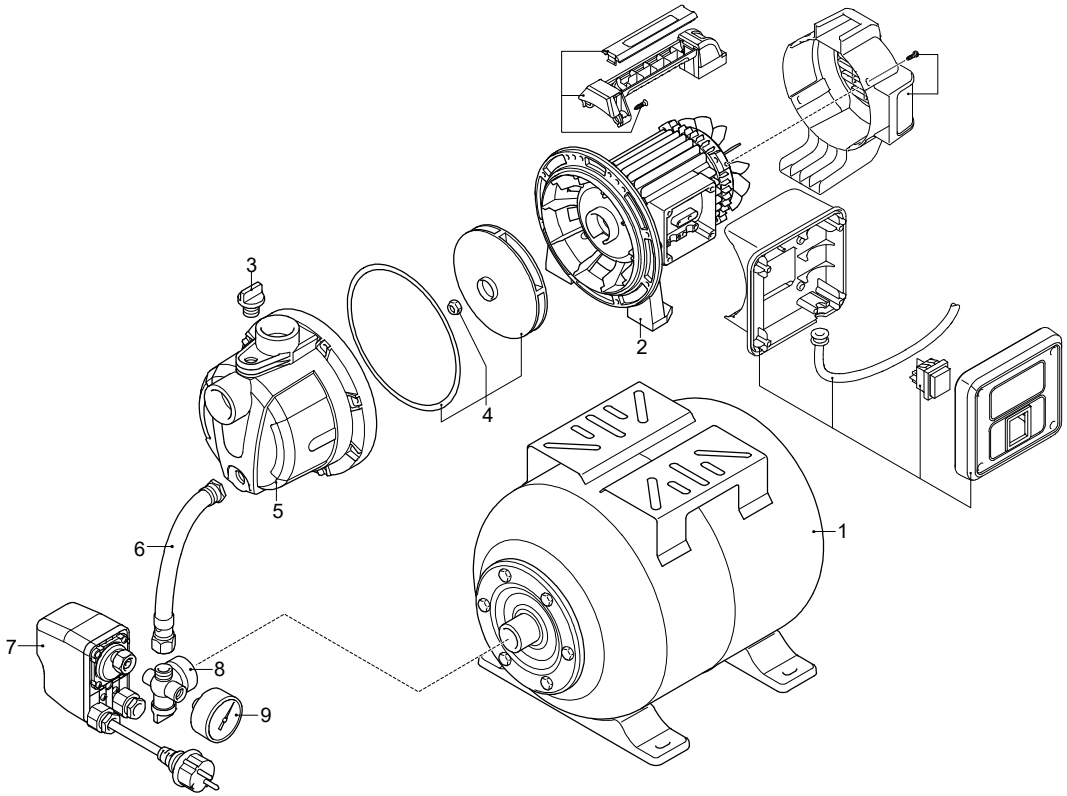

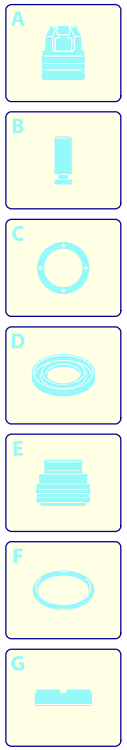

Validity	Pos.	Code	Description	Q
	1	4540490	Tank	1
	2	4540850	Motor	1
	3	4540910	Plug	1
	4	4540760	Impeller	1
	5	4540990	Head	1
	6	4540410	Pipe	1
	7	4540420	Pressure switch	1
	8	4540440	Fitting	1
	9	4540430	Pressure gauge	1

UN_CE_2648-LL