OMEGA 140 DIMENSIONS

All Dimensions are WITHOUT Control Unit or Regulator

Dimensional Drawings are Shown in Millimeters. To Convert to Inches, Multiply Dimension x 0.03937

Specifications	OMEGA 140
Inlet Port - Hose Barb	1-1/2"HB
Outlet Ports - Hose Barb	(2) 3/4"FPT
Bypass - Hose Barb	1" HB
Dimensions	17.5"L x 15"W x 16"H
Diaphragm Material	GREENTECH (Std) Buna-N (Opt)

Lubrication: Requires 87 oz. of Udor Lube 40W Premium Pump Oil. Alternate Oil: 30W non-detergent or 15W-40 non-detergent oil.

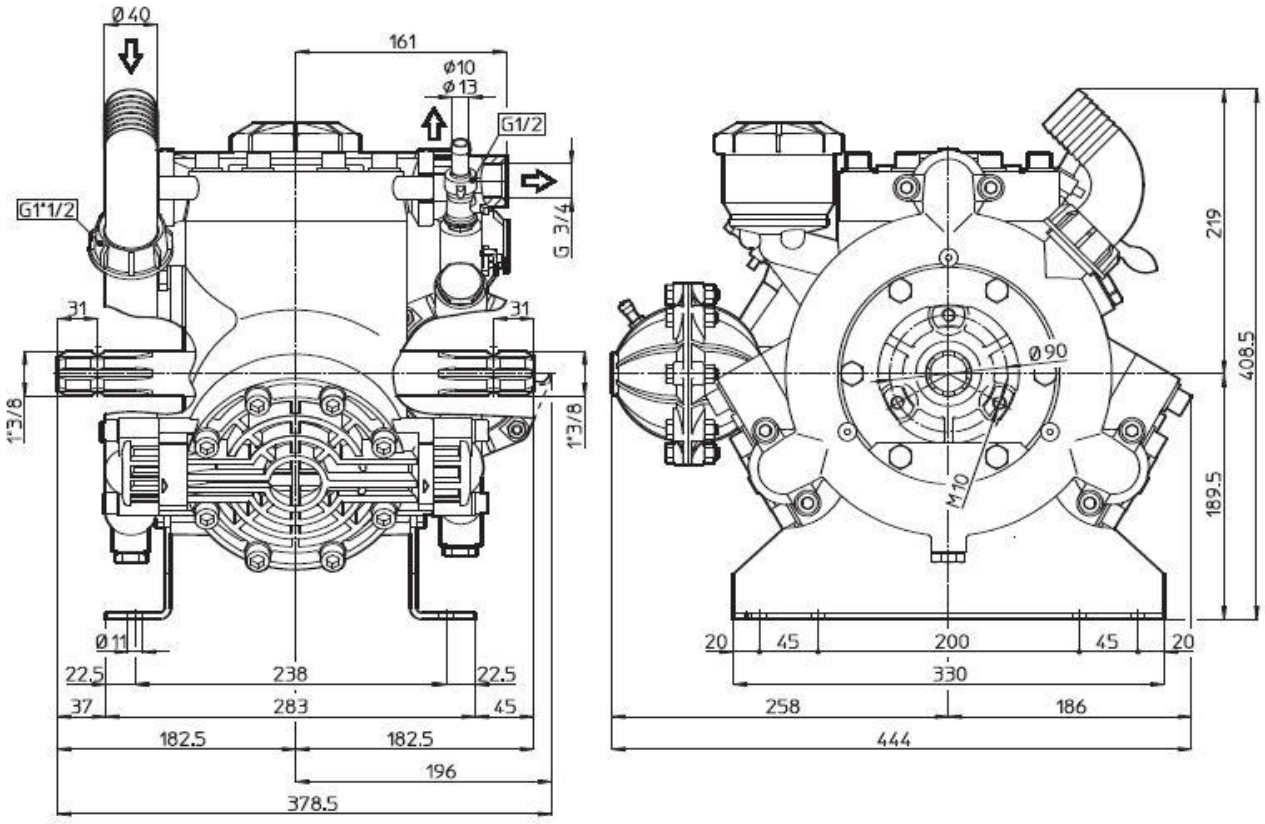

TORQUE SPECS

Ref.	Description	Ft./lb.	Nm
1	**Diaphragm Bolts** (Use Loctite 243)	22	30
2	**Head Bolts**	37	50
3	**Pulsation Dampener Bolts**	20	28
4	**Bearing Flange Bolts**	25	34
5	**Oil Cup Bolts**	7	10
6	**Manifold Bolts - Aluminum/Brass**	22	30

