# OMEGA 135 DIMENSIONS

***All Dimensions are WITHOUT Control Unit or Regulator***

***Dimensional Drawings are Shown in Millimeters. To Convert to Inches, Multiply Dimension x 0.03937***

| Specifications | OMEGA 135 |
|---|---|
| Inlet Port | 1-1/2" Hose Barb |
| Outlet Ports | (2) 1/2" Hose Barb Valve, 3/4" FPT |
| Bypass | 1" Hose Barb |
| Dimensions | 17.4"L x 15.5"W x 17.2"H |
| Diaphragm Material | GREENTECH (Std) Buna-N (Opt) |

**Lubrication**: Requires 54 oz. of Udor Lube 40W Premium Pump Oil. Alternate Oil: 30W non-detergent or 15W-40 non-detergent oil.

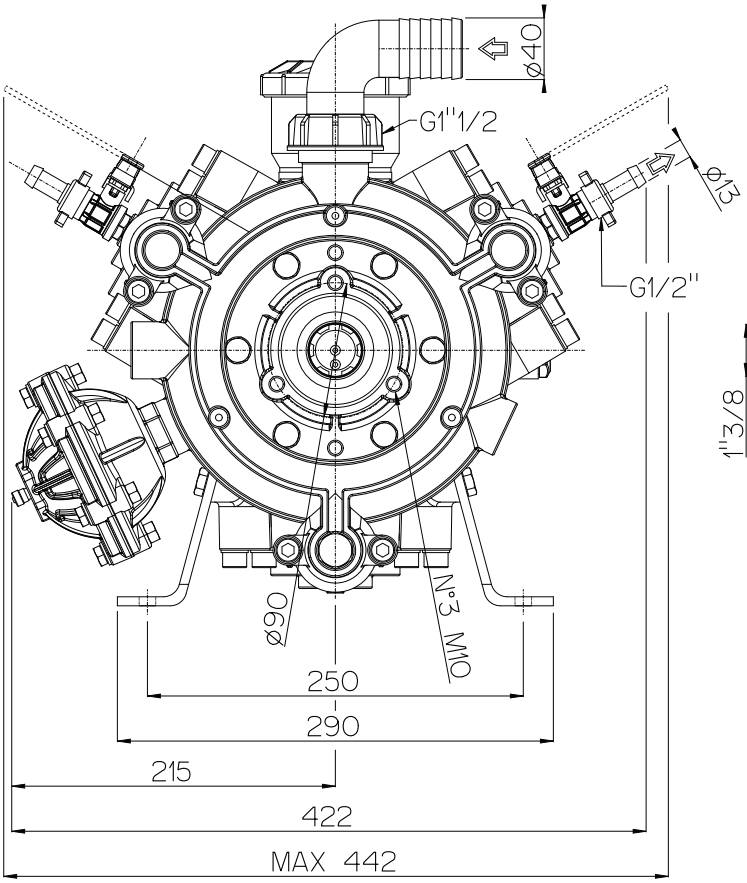


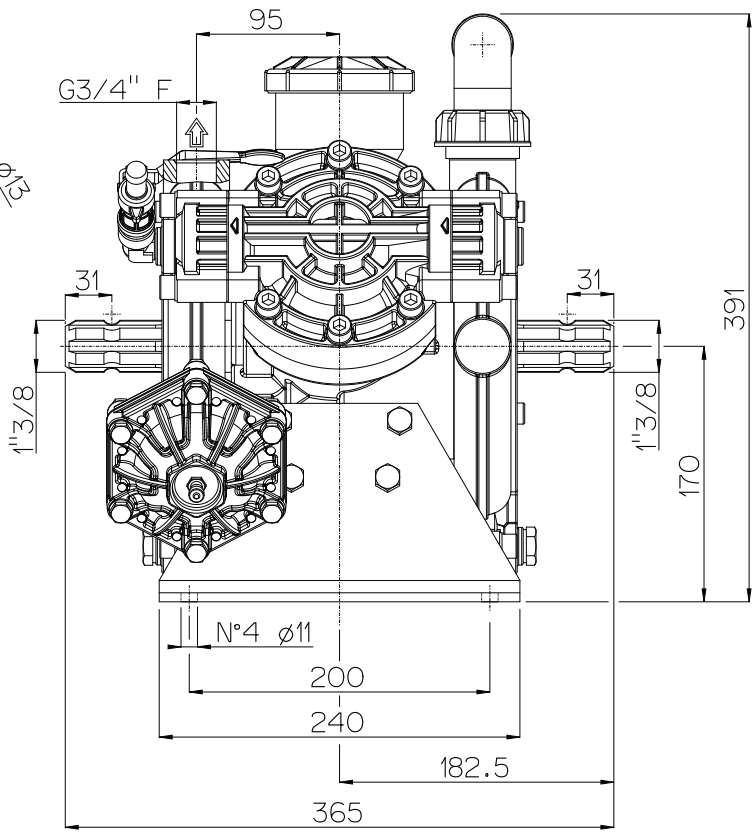


## TORQUE SPECS

| Ref. | Description | Ft./lb. | Nm |
|---|---|---|---|
| 1 | **Diaphragm Bolts** (Use Loctite 243) | 22 | 30 |
| 2 | **Head Bolts** | 63 | 85 |
| 3 | **Pulsation Dampener Bolts** | 20 | 28 |
| 4 | **Bearing Flange Bolts** | 25 | 34 |
| 5 | **Oil Cup Bolts** | 7 | 10 |
| 6 | **Manifold Bolts - Aluminum/Brass** | 22 | 30 |

