GENERAL PUMP *A member of the Interpump Group*

ODC Series

Semi-open impeller, cast iron centrifugal water pumps

FEATURES

- Heavy duty cast-iron construction
- Balanced cast iron impeller
- Efficient graphite and ceramic mechanical seal
- Buna-N elastomers for exceptional compatibilty
- Large NPT-F ports
- Priming port

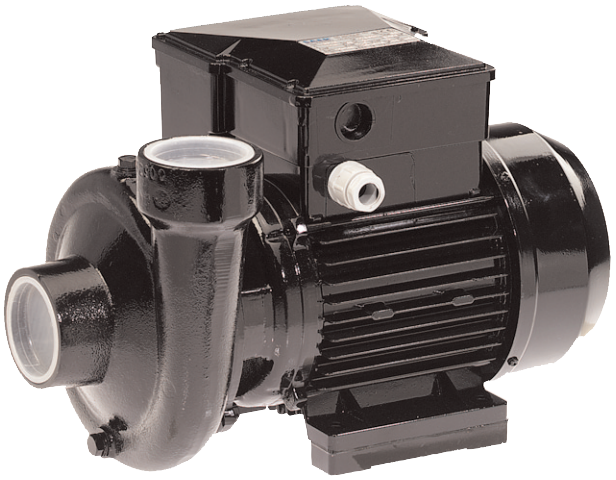

SPECIFICATIONS

Part Number	Inlet	Outlet	Impeller	Horse Power	RPM	Volts	Max psi	Max Temp °F(°C)	Mechanical Seal	Impeller Material	Body Material
ODC1503031	3"	3"	4 3/16"	3.0 HP	3450	230	90	158(70)	Graphite/Ceramic	Cast Iron	Cast Iron
ODC1504031	3"	3"	4 7/16"	4.0 HP	3450	230	90	158(70)	Graphite/Ceramic	Cast Iron	Cast Iron

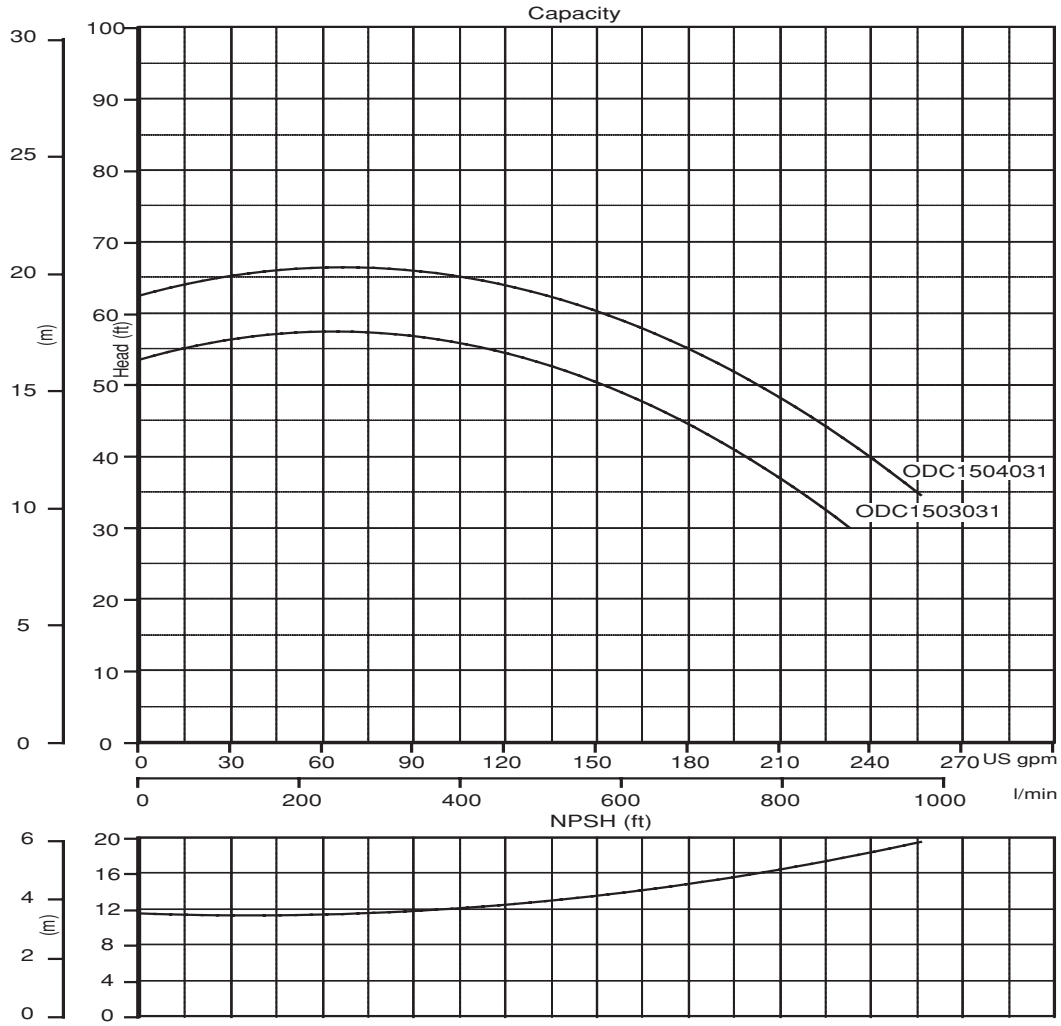

GP CENTRIFUGALS

GENERAL PUMP

ODC Series

GENERAL PUMP *A member of the Interpump Group*

Semi-open impeller, cast iron centrifugal water pumps

PARTS LIST

Item	Part No.	Description	Qty
5.	W51010087	Pump Body, Cast Iron, ODC1503031	1
	W51010086	Pump Body, Cast Iron, ODC1504031	
8.	W81100146	Drain Plug, Brass	1
9.	W57540204	Drain Gasket, Aluminum	1
10.	W57411001	Impellar Nut, Brass, ODC1503031	1
	W57411005	Impellar Nut, Brass, ODC1504031	
12.	W51300356	Impeller, Cast Iron, ODC1503031	1
	W51300357	Impeller, Cast Iron, ODC1501031	
13.	W54250207	Rotating Mechanical Seal, Graphite	1
	W54250820	ODC1504031	
14.	W54760060	O-Ring	1
15.	W54200146	Fixed Mechanical Seal, Ceramic	1
	W54200520	ODC1504031	
16.	W51640020	Seal Holding Disc	1
17.	W54300142	Deflector	1
18.	W53200280	Flange, Cast Iron, ODC1503031	1
	W53200360	Flange, Cast Iron, ODC1504031	
19.	W57022545	Screw	4
20.	W53400160	Rear Bearing, ODC1503031	1
	W53400180	Rear Bearing, ODC1504031	
20a.	W53400160	Front Bearing	1
21.	W57800621	Key, 304 SS	1
22.	W50104905	Pump & Motor Shaft, ODC1503031	1
	W50103404	Pump & Motor Shaft, ODC1504031	
24.	W56800120	Circlip, Steel	1
25.	W50002310	Motor Casing w/ Stator, ODC1503031	1
	W50002711	Motor Casing w/ Stator, ODC1504031	
26.	W55300180	Foot, Plastic	1
27.	W57100361	Tie-Rod, ODC1503031	4
	W57100373	Tie-Rod, ODC1504031	
29.	W55120081	Terminal Board Cover	1
30.	W55100100	Terminal Board	1
31.	W55170202	Strain Relief	1

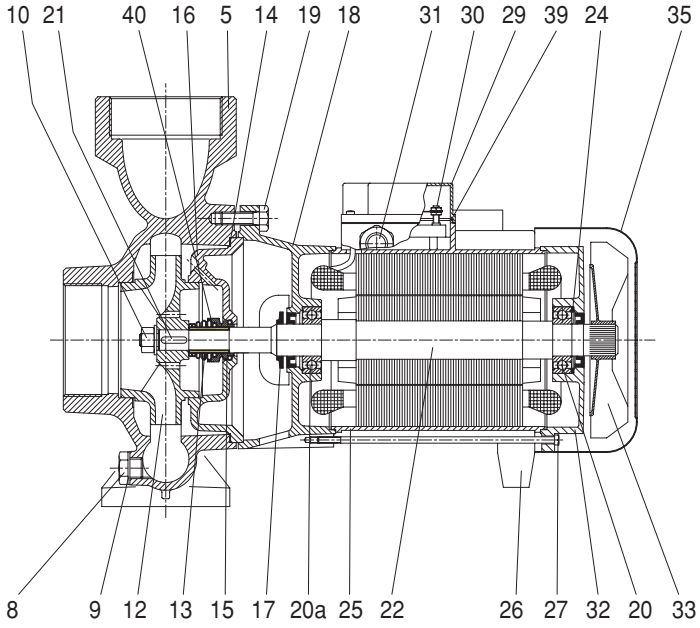

Item	Part No.	Description	Qty
32.	W53220085	Rear Motor Cover, ODC1503031	1
	W53220	Rear Motor Cover, ODC1504031	
33.	W55000100	Motor Fan, Plastic, ODC1503031	1
	W55000120	Motor Fan, Plastic, ODC1504031	
35.	W55050101	Fan Cover	1
39.	W55180020	Terminal Board Gasket	1
40.	Inquire	Bushing	1
52.	W55500360	Capacitor, ODC1503031	1
	W55500443	Capacitor, ODC1504031	

DIMENSIONS

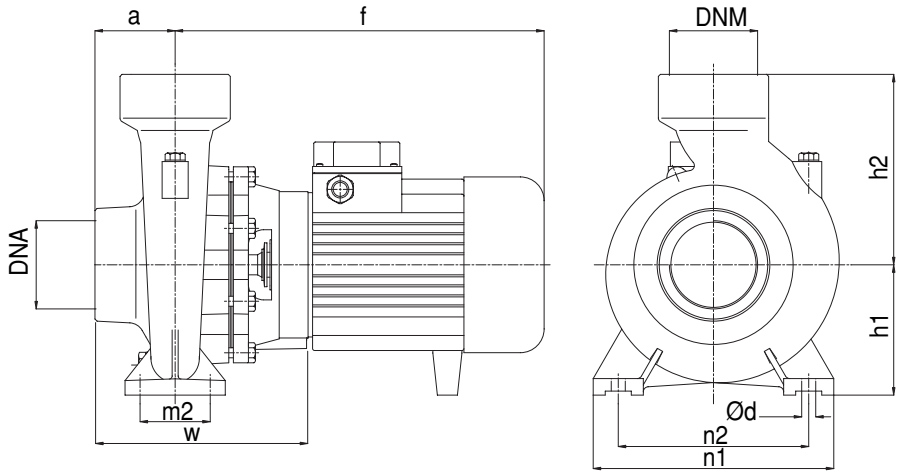

in (mm)	DNA	DNM	f	a	n1	n2	h1	h2	w	Ød	lb(kg)
ODC1503011	3	3	13.2 (335)	3.1 (80)	9.4 (240)	7.5 (190)	5.1 (130)	7.5 (190)	2.8 (70)	0.6 (14)	75 (34)
ODC1504011	3	3	13.6 (345)	3.1 (80)	9.4 (240)	7.5 (190)	5.1 (130)	7.5 (190)	2.8 (70)	0.6 (14)	75 (34)

GENERAL PUMP 1174 NORTHLAND DRIVE • MENDOTA HEIGHTS, MN 55120
PHONE: (651)454-6500 • FAX: (651)454-4524 • e-mail: sales@gpcompanies.com • www.generalpump.com

300361 Rev. B
7-02

GENERAL PUMP