GENERAL PUMP *A member of the Interpump Group*

OAC Series

Semi-open impeller, cast iron centrifugal water pumps

FEATURES

- Heavy duty cast-iron construction
- Balanced brass impeller
- Efficient graphite and ceramic mechanical seal
- Buna-N elastomers for exceptional compatibilty
- Large NPT-F ports
- Priming port

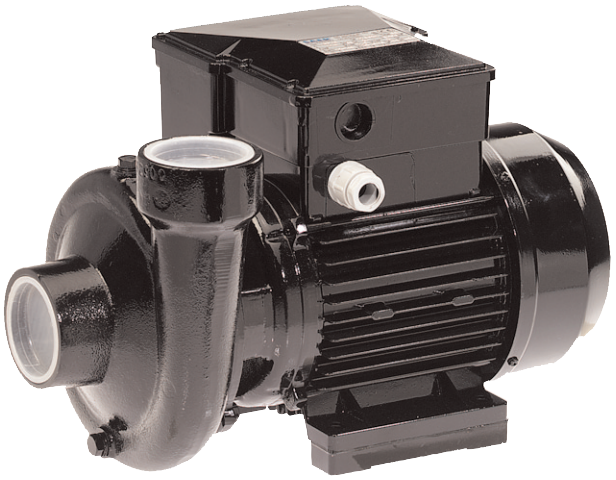

SPECIFICATIONS

Part Number	Inlet	Outlet	Impeller	Horse Power	RPM	Volts	Max psi	Max Temp °F(°C)	Mechanical Seal	Impeller Material	Body Material
OAC1101011	2"	2"	4 5/16"	1.0 HP	3450	110	90	158(70)	Graphite/Ceramic	Brass	Cast Iron
OAC1101511	2"	2"	4 5/16"	1.5 HP	3450	110	90	158(70)	Graphite/Ceramic	Brass	Cast Iron
OAC1102031	2"	2"	4 5/16"	2.0 HP	3450	230	90	158(70)	Graphite/Ceramic	Brass	Cast Iron

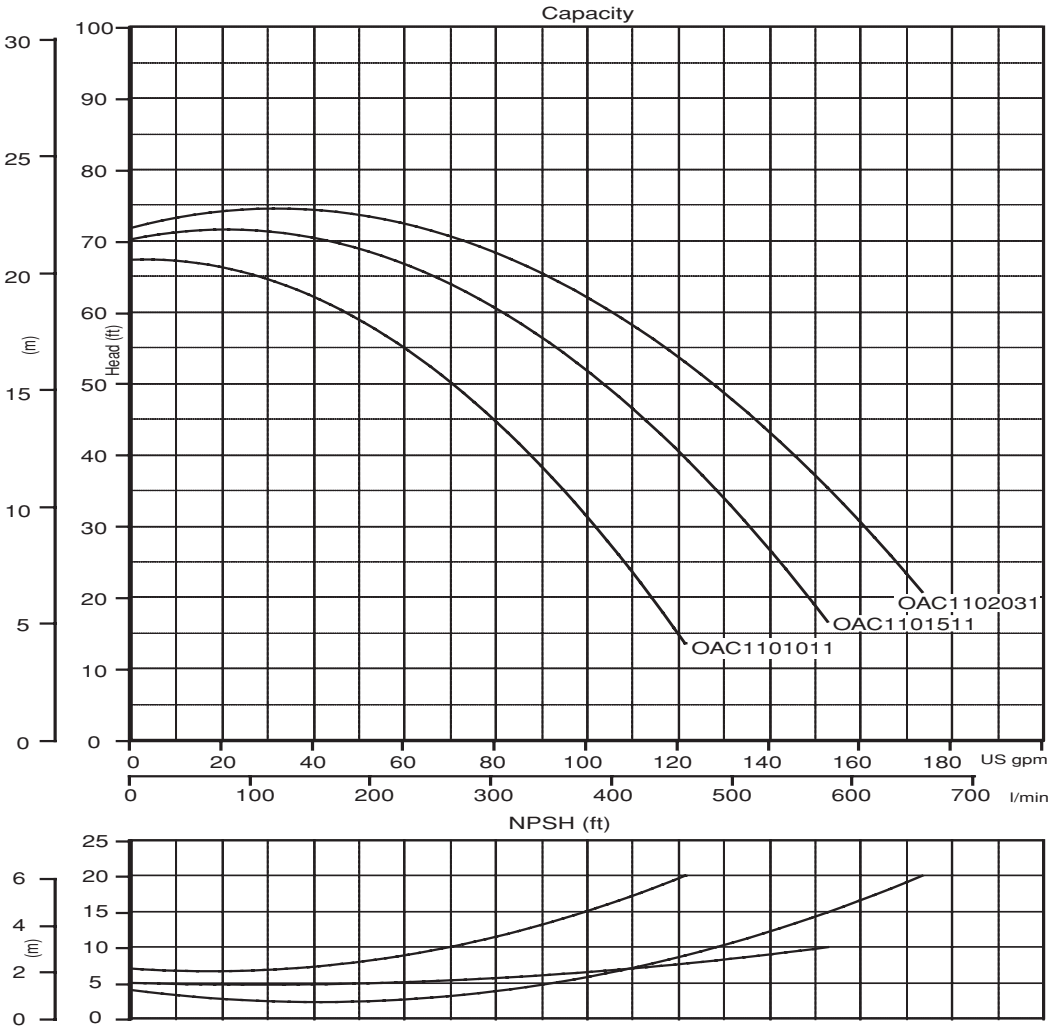

GP CENTRIFUGALS

GENERAL PUMP

OAC Series

GENERAL PUMP *A member of the Interpump Group*

Semi-open impeller, cast iron centrifugal water pumps

PARTS LIST

Item	Part No.	Description	Qty
5.	W51010081	Pump Body, Cast Iron	1
8.	W57002002	Drain Plug, Brass	1
9.	W57540204	Drain Gasket, Aluminum	1
10.	W57411005	Impellar Nut, Brass	1
12.	W51300310	Impeller, Brass, OAC1101011	1
	W51300321	Impeller, Brass, OAC1101511	
	W51300331	Impeller, Brass, OAC1102031	
13.	W54250120	Rotating Mechanical Seal, Graphite	1
14.	W54730480	O-ring	1
15.	W54200183	Fixed Mechanical Seal, Ceramic	1
17.	W54300080	Deflector	1
18.	W53200145	Flange, Cast Iron	1
19.	W57002030	Screw	4
20.	W53400140	Bearing	2
21.	W57800609	Key, 304 SS	1
22.	W50101660	Pump & Motor Shaft, OAC1101011	1
	W50101655	Pump & Motor Shaft, OAC1101511	
	W50101820	Pump & Motor Shaft, OAC1102031	
24.	W56800080	Circlip	1
25.	W50011206	Motor Casing w/ Stator, OAC1101011	1
	W50011745	Motor Casing w/ Stator, OAC1101511	
	W50011744	Motor Casing w/ Stator, OAC1102031	
27.	W57100351	Tie-rod	4
29.	W55130030	Terminal board cover	1
30.	W55100305	Terminal board	1
31.	W55170202	Strain Relief	1
32.	W53220060	Rear Motor Cover, Aluminum	1
33.	W55000080	Motor Fan, Plastic	1
35.	W55050080	Fan Cover	1
52.	W55500407	Capacitor, OAC1101011	1
	W55500440	Capacitor, OAC1101511	
	W55500343	Capacitor, OAC1102031	

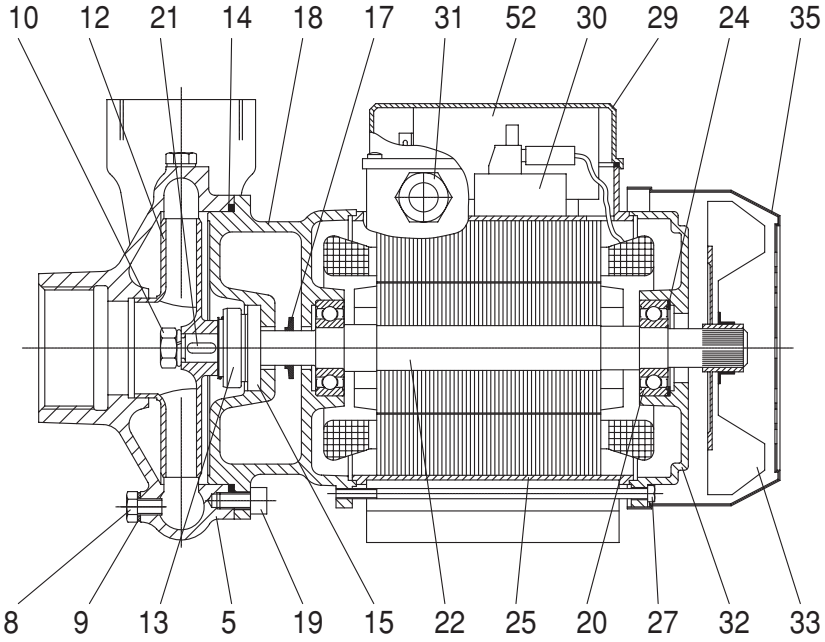

DIMENSIONS

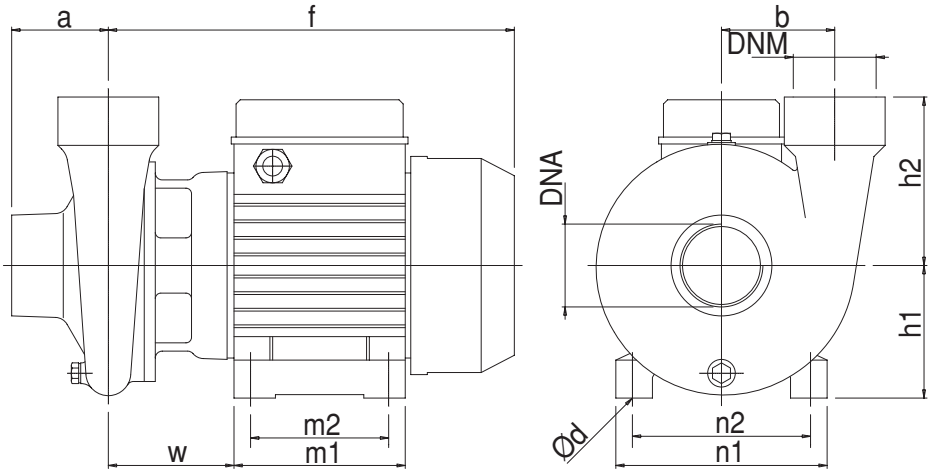

in (mm)	DNA	DNM	f	a	b	m1	m2	n1	n2	h1	h2	w	Ød	lb(kg)
OAC1101011	2	2	11.6 (294)	2.8 (70)	3.2 (82)	4.9 (124)	3.9 (100)	6.0 (152)	4.9 (125)	3.8 (96)	4.8 (122)	3.5 (88)	0.4 (9)	35.3 (16)
OAC1101511	2	2	11.6 (294)	2.8 (70)	3.2 (82)	4.9 (124)	3.9 (100)	6.0 (152)	4.9 (125)	3.8 (96)	4.8 (122)	3.5 (88)	0.4 (9)	42.3 (19)
OAC1102011	2	2	11.6 (294)	2.8 (70)	3.2 (82)	4.9 (124)	3.9 (100)	6.0 (152)	4.9 (125)	3.8 (96)	4.8 (122)	3.5 (88)	0.4 (9)	48.5 (22)

GENERAL PUMP 1174 NORTHLAND DRIVE • MENDOTA HEIGHTS, MN 55120
PHONE: (651)454-6500 • FAX: (651)454-4524 • e-mail: sales@gpcompanies.com • www.generalpump.com

300360 Rev. B
7-02

GENERAL PUMP