Nozzle Holders

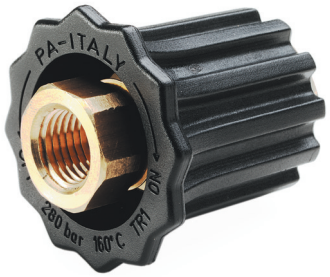

ADJUSTABLE NOZZLE HOLDER

Part Number	**YADJNOZ**
Maximum Pressure	3500 PSI
Maximum Flow	7.8 GPM
Maximum Temperature	300°F
Port Size: Inlet	1/4-18 NPT - F
Nozzle	1/4-18 NPT - F
Weight	4.3 oz.

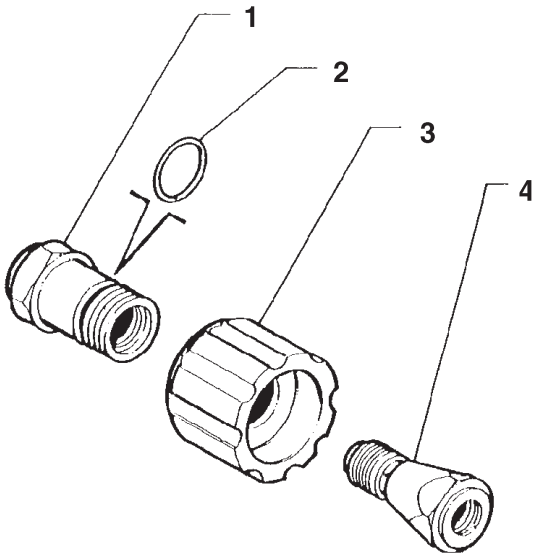

No.	Part No.	Description	Qty.
1.	Y22.0007.31	Inlet	1
2.	Y10.3066.00	O-Ring, .614 x .070, Buna-N	1
3.	Y22.0006.22	Knob	1
4.	Y22.0001.31	Holder, Nozzle	1



DOUBLE NOZZLE HOLDER

Part Number	**ZUDBL**
Maximum Pressure	3000 PSI
Maximum Volume	5.5 GPM
Port Size: Inlet	1/4-19 BSPP - F
Nozzle	1/4-19 BSPP - F
Weight	7.1 oz.

GENERAL PUMP 1174 NORTHLAND DRIVE • MENDOTA HEIGHTS, MN 55120
PHONE: (651)454-6500 • FAX: (651)454-4524 • e-mail: sales@gpcompanies.com • www.generalpump.com

300124 Rev. C
10-01

GENERAL PUMP