NK 500 SERIES DIMENSIONS

WEIGHT 67 LBS
LUBRICATION 57.6 OZ UDOR LUBE

Dimensional Drawings are Shown in Millimeters. To Convert to Inches, Multiply Dimension x 0.03937

NK 500 SERIES PUMPS

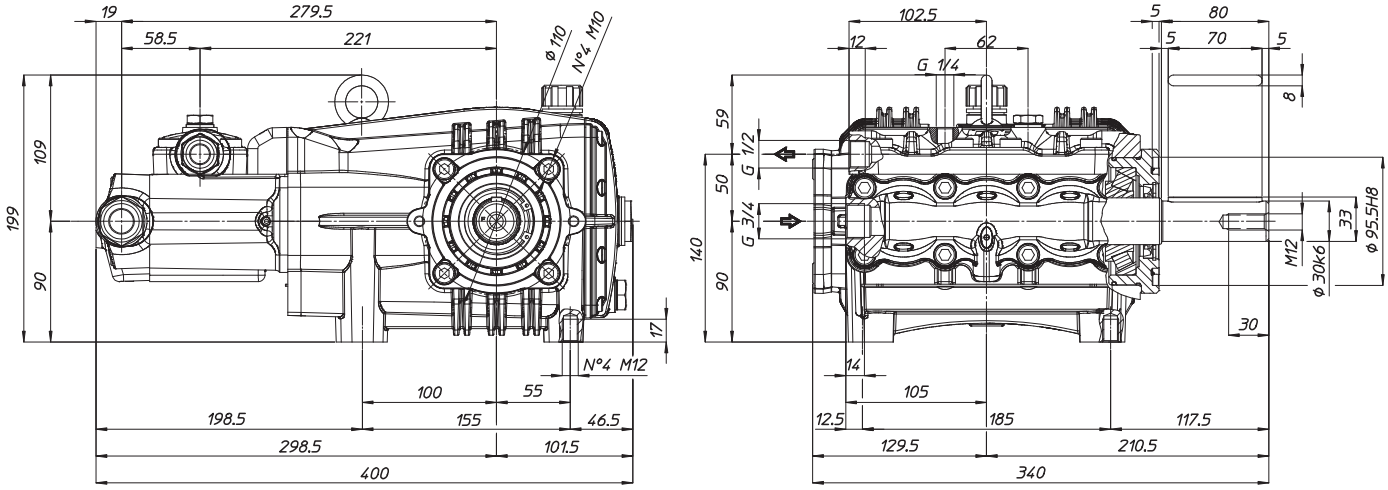

TORQUE SPECS

Ref.	Description	Ft./lb.	Nm	Loctite®
1	Head Bolts	37	50	-
2	Valve Caps	88	120	243
3	Inlet Cap	133	180	-
4	Outlet Cap	88	120	243
5	Bearing Flange Bolts	37	50	-
6	Rear Cover Bolts	8	11	-
7	Connecting Rod Bolts	19	25	243
8	Plunger Bolts	22	30	270
9	Valve Cover Bolts	-	-	-
10	Oil Drain Plug	8	11	-

