

Manual and motorized Multiduplo

Control unit for sprayers

INSTRUCTIONS FOR USE

EN

IDROMECCANICA BERTOLINI
Reggio Emilia - Italy

MULTIDUPLO

Builder: IDROMECCANICA BERTOLINI SpA
Street address: Via Cafiero, 20
42124 REGGIO EMILIA - ITALY
Tel. +39 0522 306641 Fax +39 0522 306648
E-mail:email@bertolinipumps.com
Internet:www.bertolinipumps.com

Issue: December 2015
Edition: 01 / April 2022

MANUFACTURER'S DECLARATION

Machinery Directive 2006/42/EC

Idromeccanica Bertolini SpA
declares under its own responsibility that the control unit series

MULTIDUPLO

with serial number
(to be reported by the buyer as reported on the identification plate)

- it is built to be incorporated into a machine or to be assembled with other machinery to make up a machine considered by the Directive **2006/42/EC;**

- compliance in all points with the provisions of this Directive is the responsibility of the manufacturer of the machine that incorporates the control unit.

Therefore he declares that it is not allowed to put the above product into service until the machine in which it will be incorporated or of which it will become a component has been identified and its conformity with the provisions of the Directive has been declared.**2006/42/EC, i.e. until the product referred to in this declaration forms a single body with the final machine.**

Reggio Emilia 29/04/2022

Luigi Quaretti
(Chief Executive Officer - Idromeccanica Bertolini SpA)

MULTIDUPLO

PRODUCT DESCRIPTION

The Bertolini control unit model Multiduplo is suitable for use with water and chemical products at a maximum temperature of 60° C.
If particularly corrosive solutions and / or higher temperatures are used, it is necessary to contact the "Bertolini Technical Service".
Depending on the version, it can be completely manual or electrically operated by means of a special control panel to be ordered separately.
The use of the control unit must respect the specifications indicated on the plate, the removal of the same or the plate bearing the serial number will invalidate any guarantee.

Upon receipt of the control unit, check the plate which is similar to the one shown below with the following data:

1-Maximum pressure allowed in PSI
2-Maximum pressure allowed in Bar
3-Maximum flow rate in L / min
4-Maximum range in USGPM
5-Model
6- Lever position indication
7-Safety indications

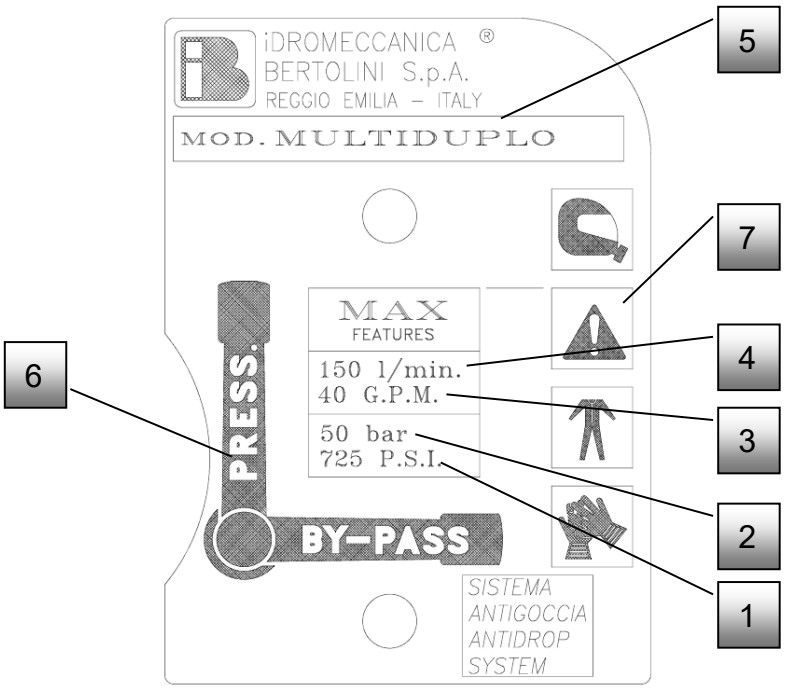

NOTE: the plate shown present only in the manual versions

MULTIDUPLO

COMPONENT IDENTIFICATION

MANUAL VERSION

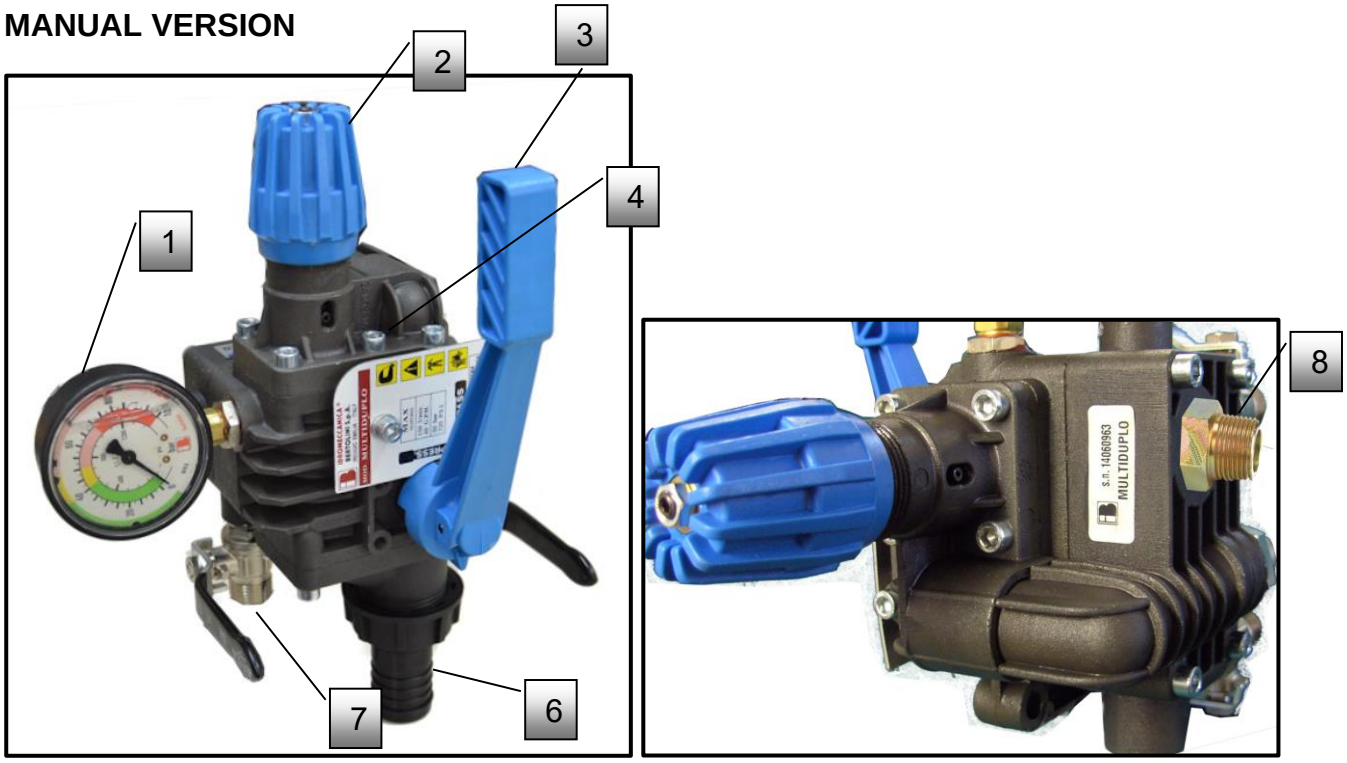

ELECTRIC VERSION 12Vdc

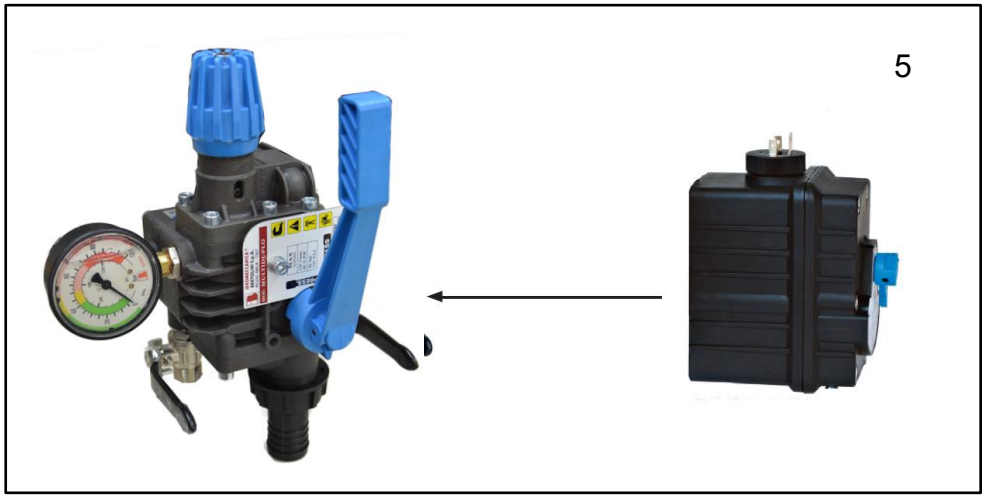

Pos.	Description	Pos.	Description
1	Pressure gauge	6	By-pass fitting
2	Pressure adjustment knob	7	Ball valves
3	Pressure-cancel lever	8	Additional input / output G.3/4” *
4	Anti-drip nozzle position		
5	Pressure relief valve conversion kit from manual to motorized (Code 25.9967.97.3)		

* If the control unit is equipped with this fitting, depending on the circuit created it can be used as:

- Chemical vacuum: to carry out the loading of liquid or powder chemical products
- Connection of motorized section valves

MULTIDUPLO

INSTALLATION

ATTENTION!

- **The control unit cannot be put into service if the machine in which it is incorporated does not comply with the safety requirements established by the European directives. This fact is guaranteed by the presence of the CE marking and by the Declaration of Conformity of the manufacturer of the machine that incorporates the pump;**
- Do not use the control unit if it has suffered strong impacts;
- Pay attention to the use of the control unit in places where there are moving vehicles that can crush or damage the delivery pipe and the spray lance.
- Make sure that the anchorage of the control unit support is appropriate by means of suitably fastened screws.
- Make sure that the inlet, delivery and return pipes are of a suitable diameter, not less than the diameter of the fitting mounted on the pump and on the Multiduplo control unit. It is compulsory to use pre-compressed hydraulic fittings or, as a second option, good quality and perfect sealing clamps. Use only components (pipes, clamps, fittings, etc.), whose characteristics are equal to the maximum pressure of the pump.
- The Multiduplo control unit is equipped with a particular and exclusive function which, thanks to the Venturi physical principle, creates a depression in the by-pass phase which it generates for two fundamental purposes:
  - ANTI-DROP: avoids dripping of the nozzles
  - CHEMICAL ASPIRATION: loading of chemical products during the preparation of the mixture for treatment

  Therefore, for correct operation, it is necessary to consider the flow rate of the pump to which it is combined and to install the most appropriate nozzle to create the capacity maximum suction.

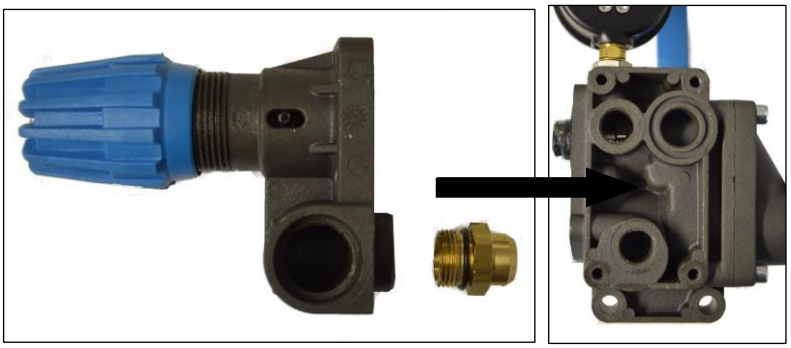

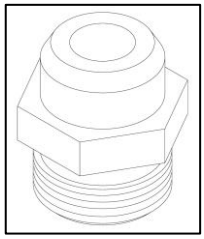

24.0215.53.2 (hole D. 9.5mm and painting): for flow rates up to 90 L/min
24.0216.53.2 (hole D. 12mm): for flow rates over 90 L / min

- **<u>Do not install curved fittings on the by-pass (6) of the control unit, otherwise the Venturi principle will lose its effectiveness</u>**

Failure to comply with the above conditions may jeopardize the proper functioning of the control unit and consequently the guarantee is void.

MULTIDUPLO

ADJUSTMENT AND USE

ATTENTION!

Observe the following carefully; otherwise the guarantee of the control unit is void.

1. Turn the pressure adjustment knob on the control unit anticlockwise, unscrewing it almost completely;
2. Check that the sector supply ball valves are closed;
3. **Always start the pump with the pressure-cancel lever (or gearmotor) in the by-pass position, never start the unit by the pressure lever.** This operation is essential; starting with the control unit under pressure, the pump is damaged and priming times are lengthened;
4. Start the pump and let it run for at least two minutes and in any case until the air has completely escaped from the hydraulic circuit;
5. Turn the pressure-cancel lever anticlockwise, (or operate the gearmotor), to the press position;
6. Completely screw the adjustment knob and if necessary, act on the screw and the relative nut to adjust the desired maximum pressure. Warning: during this phase the pressure must never exceed the maximum value allowed by the pump and the system;
7. Open the taps to feed the sectors and carry out the treatment.

ATTENTION!
After having opened the sectors according to the flow rate used, there may be a drop in the previously calibrated pressure, this drop is normal and not a malfunction of the control unit.
NEVER act on the adjustment knob to re-establish the maximum calibrated pressure, because during the closing phase of the sectors, overpressures may occur which are highly dangerous for the system.

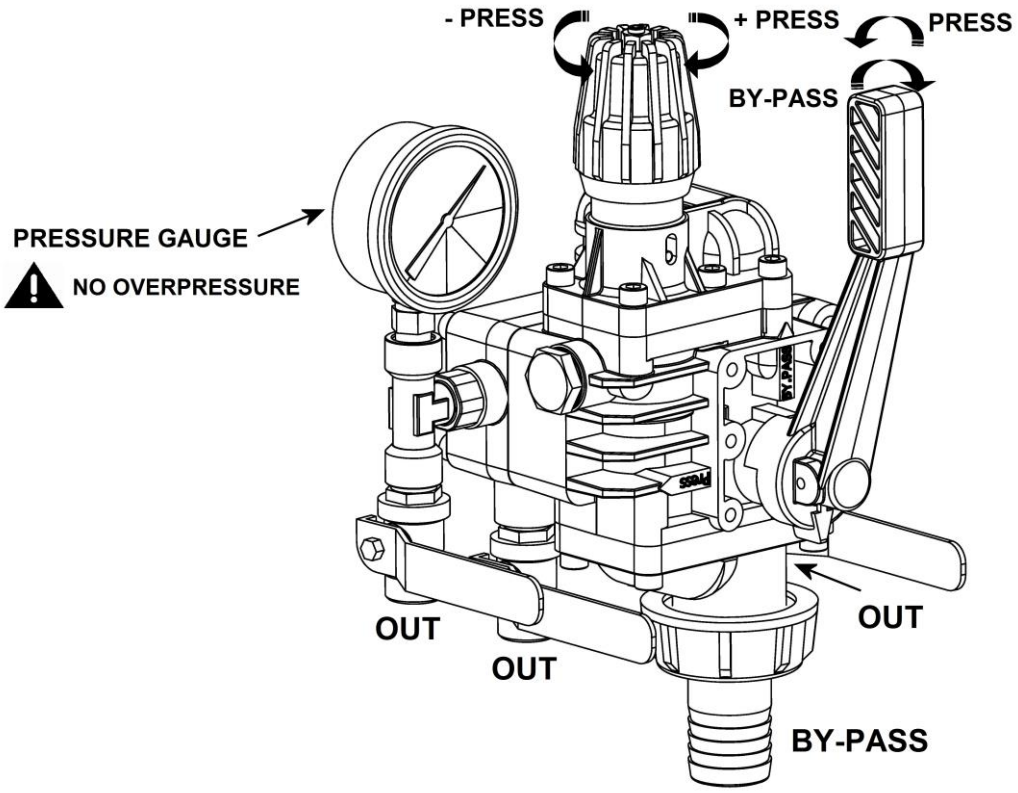

MULTIDUPLO

ASPIRATES CHEMICALS

If the control unit is equipped with an additional input / output and connected to a special circuit, it can be used to load / mix the chemical product (both liquid and powder). This operation is carried out by placing the pressure-cancel lever in the by-pass and closing all the sector supply ball valves.
Example of chemical products suction circuit:

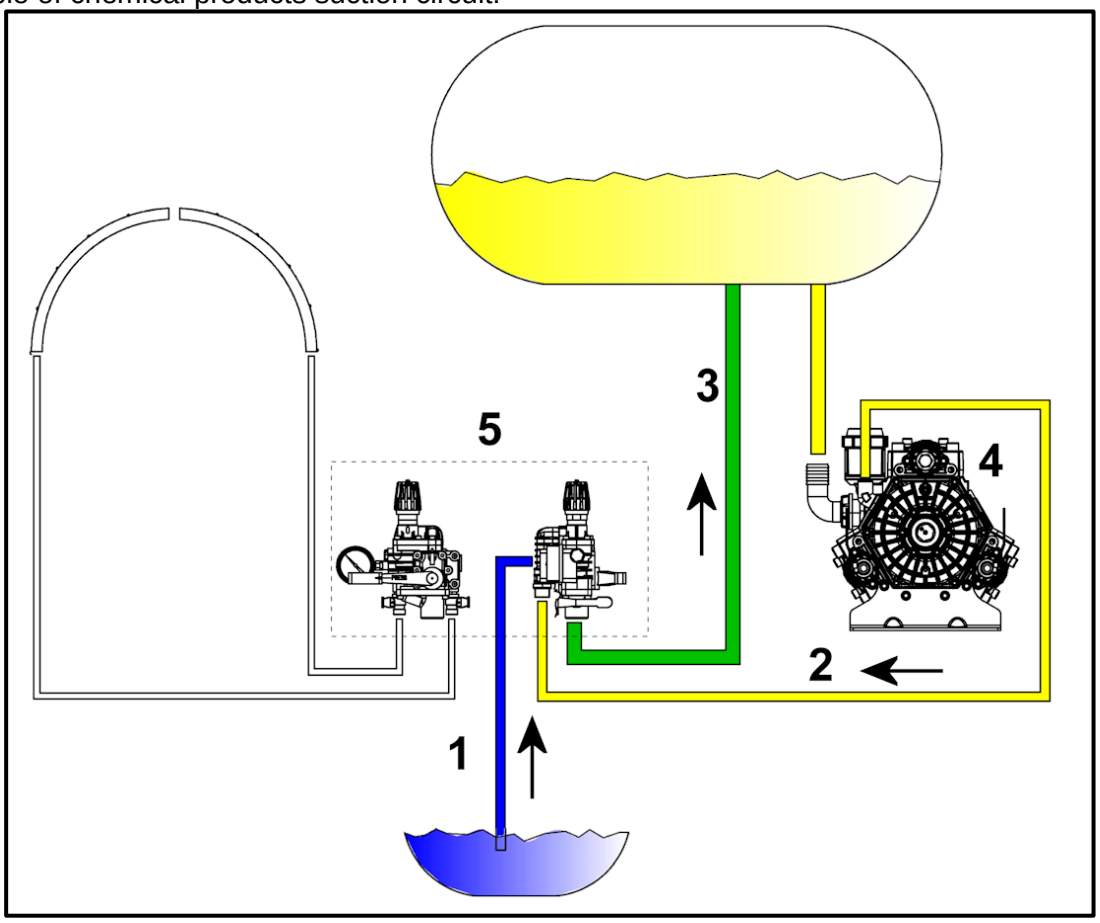

Pos.	Description	Pos.	Description
1	Suction chemicals duct	4	Bertolini pump
2	Control unit power supply duct	5	Multiduplo control unit
3	Bypass duct		

STANDSTILL PERIODS

ATTENTION!
The control unit fears freezing

For long periods of inactivity and in the event of low temperatures, completely empty the control unit so as not to have corrosion and breakage problems.
Damage due to chemical aggression and frost are not covered by the guarantee.

MULTIDUPLO

Manufacturer: IDROMECCANICA BERTOLINI SpA
Street address: Via Cafiero, 20
42124 REGGIO EMILIA - ITALY
Tel. +39 0522 306641 Fax +39 0522 306648
E-mail: email@bertolinipumps.com
Internet: www.bertolinipumps.com