mecc alte

POWER FROM WITHIN

MERCURIO

TECHNICAL GUIDE

GUIDA TECNICA

INDEX pag. 2
1 WARNING pag. 3
2 GENERAL INFORMATION pag. 4
2.1 Block diagram pag. 4
3 CYCLE OF CHARGE pag. 5
4 FUNCTION MODE pag. 6
4.1 Mode ONOFF pag. 7
4.2 Mode Dual Speed pag. 8
4.3 Mode Variable Speed pag. 9
5 INPUT pag. 10
5.1 Direct current pag. 10
5.2 Single-phase alternating current AC1 pag. 11
5.2.1 Voltage limit pag. 11
5.2.2 Form factor (D.P.F.) pag. 12
5.2.3 Frequency limit pag. 12
5.3 Three-phase alternating current AC3 pag. 13
5.3.1 Voltage limit pag. 13
5.3.2 Form factor (D.P.F.) pag. 14
5.3.3 Frequency limit pag. 14
5.4 Photovoltaic input pag. 15
5.5 Other limitations pag. 16
5.5.1 Output Power pag. 16
5.5.2 Output Current pag. 16
5.5.3 Temperature pag. 17
6 BATTERY pag. 18
7 TECHNICAL CHARACTERISTICS pag. 19
8 EFFICIENCY pag. 20
9 MECHANICAL FIXING AND VENTILATION pag. 21
10 ELECTRICAL CONNECTION pag. 22
10.1 Power connection pag. 23
10.1.1 Wire sizing pag. 24
10.2 Three phases (AC3) pag. 25
10.3 Three phases (AC3+PV) pag. 26
10.4 Single phase (AC1) pag. 27
10.5 Single phase (AC1+PV) pag. 28
10.6 Signal connection pag. 29
10.6.1 Relay pag. 30
10.6.2 LED pag. 31
10.6.3 Analogue output pag. 33
10.6.4 Serial interface RS232 pag. 33
10.6.5 Battery temperature sensor pag. 33
10.6.6 Digital input pag. 34
10.6.6.1 RUN pag. 34
10.6.6.2 EPO pag. 34
10.6.7 Power Off pag. 35
11 FAULT pag. 36
12 SOFTWARE pag. 36
12.1 Set password (for advanced access) pag. 37
12.2 Interface SW pag. 38
12.3 History and failure conuter pag. 40
12.4 Advance control parameter pag. 41
12.5 Parameter description pag. 42
12.5.1 Imax charge pag. 42
12.5.2 Vcycle pag. 42
12.5.3 Vstandby pag. 42
12.5.4 Size pag. 43
12.5.5 Function mode pag. 43
12.5.6 Input mode pag. 43
12.5.7 VbattTH1 pag. 44
12.5.8 IbattTH1 pag. 44
12.5.9 IoutTH2 pag. 45
12.5.10 Vmax & Vmin pag. 45

12.5.11 Tacc (Delay3) pag. 45
12.5.12 Relay Mode pag. 45
12.5.13 Max start time (delay5) pag. 46
12.5.14 Freq start pag. 46
12.5.15 Freq stop pag. 46
12.5.16 D.P.F. pag. 47
12.5.17 Max Slope pag. 47
12.6 Detailed curve - output power pag. 49
13 OPTIONAL pag. 51
13.1 Interface USB pag. 51
13.2 Interface RS485 pag. 51
13.3 Interface ModBus pag. 51
13.4 Interface Ethernet pag. 51
13.5 Display pag. 52
14 ENCLOSURE pag. 53
14.1 Mercurio 5k pag. 53
14.2 Mercurio 10k pag. 57
14.3 Mercurio 15k pag. 61
15 CERTIFICATION pag. 64
16 ORDINARY SERVICE pag. 65
16.1 Disposal informations pag. 65
APPENDIX A pag. 66

This document describes the technical characteristics and functioning of the battery charger Mercurio.

1 WARNING

Before any operation to the equipment, read this manual carefully, follow instructions contained therein.
Any change and/or tampering of the equipment and any misuse from not following these instructions will affect the warranty.
In any case Mecc Alte shall not be responsible for incidental or consequential damages, due to improper use not described in this user's manual.
Mecc Alte does not assume any liability for repairs or alterations made by others.
Mecc Alte does not assume any liability for injuries to people or things caused by bad functioning of this equipment.
During the warranty period the service and the repairs must be by Mecc Alte technical assistance centre. Failure to comply will affect the warranty
Store this manual with the product for future consultations.

Mecc Alte can modify at any time without any notice the contents of this manual and/or the technical features of the products.



SAFETY
Because of the presence of high energy battery, that could be dangerous also with general switch in OFF position and/or with disconnected cable, any service must be made only by specialized and skilled staff. Avoid the access of water or liquids and/or other foreign objects in general, into the Mercurio.
To avoid overheat fault not expose to the sun or heat source.



BATTERY
The battery substitution has to be made by specialized staff only.
Don't try to open the battery, the materials contained in are very dangerous for eyes and skin.

2 GENERAL INFORMATION

Mercurio is a battery charger intended for the world of telecommunications, designed with the most advanced electronic technologies.

A feature which makes it very versatile is the Mercurio ability to accept a multitude of input signals, to provide a complete cycle of battery charge and during the cycle provides power to the loads.

Mercurio has been designed to work in a fully automated system without the need of external operators.

It was designed to handle engines (prime movers) with different modes of operation (OnOff, Dual speed and Full Variable).

A particular feature that greatly increases the field of application is the possibility to insert a power curve of your choice.

Mercurio is in compliance with the requirements for electromagnetic compatibility and safety requirements of the current European legislation that regulates the application of the CE mark.

2.1 Block diagram

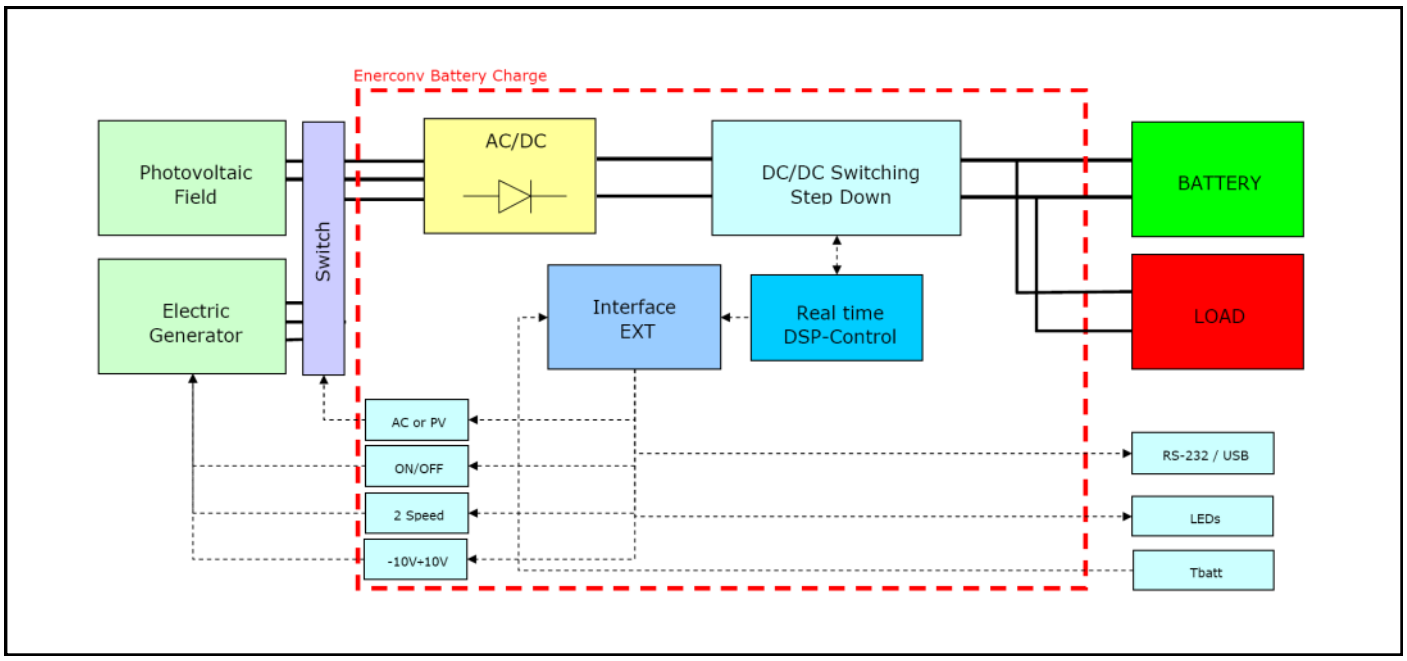

Figure 1: Block diagram of Mercurio.

AC/DC
When the input is in the right range convert the AC input voltage in DC voltage with bridge rectifier.

DC/DC Switching
Converter is a switching step down DC/DC with high efficiency.

Real time DSP-Control
Using a Digital Signal Processor (DSP) controls all the functionality of the Mercurio regarding the power circuit command and control, the interface and the communication.
The high computing speed of the DSP (up to 40 million operation/second) allows it to manage the variation of the external parameter (input, load, etc…) in real time with a high dynamic stability and efficiency of the conversion.

Interface EXT
The interface that takes care of the complete engine management system with free contacts, and provides operating information through the signalling LEDs and RS232

- #3 relays
- 1 isolated analogue output
- RS232
- #2 LEDs
- Battery Temperature sensing

3 CYCLE OF CHARGE

At the time it was implemented a “two stage” charge cycle (constant current, constant voltage and maintenance), with the working parameters set entirely within specific range.

In the Figure 2 shows an example of the charge cycle performed. It is divided into three phases:

1. Constant Current at the current set.
2. Constant Voltage at Vcycle voltage.
3. Maintenance charge at Vstandby voltage.

The maintenance phase will only be available for photovoltaic plants connected, otherwise the charge will be completed after the constant voltage phase.

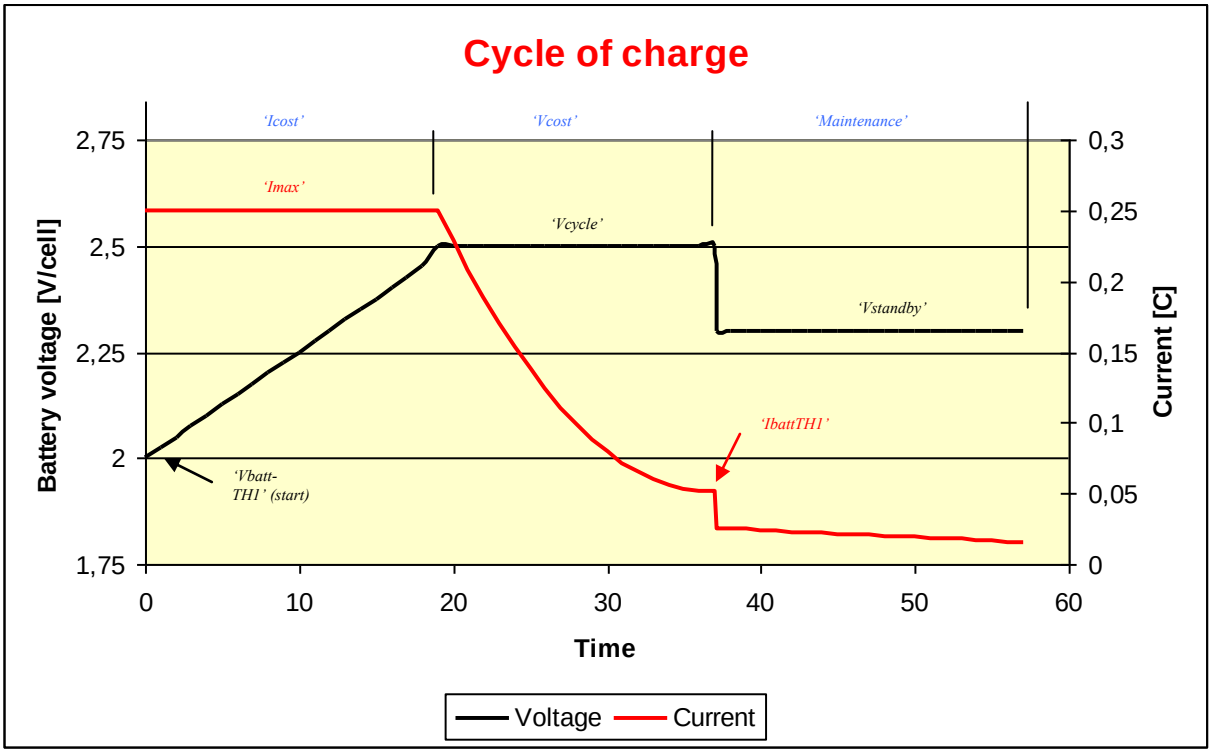

Figure 2: Charging cycle of the battery.

Charging will start when the batteries are discharged, with voltage level pre-set.

For lead-acid batteries the recommended values for charging voltage, with a temperature of 20-25°C, are the following:

- cyclic use: 2.40 - 2.45 V/cell – (Vcycle/cell)
- stand-by use: 2.25 - 2.30 V/cell - (Vstandby/cell)

4 FUNCTION MODE

The first power on and after a fault, the battery charger is in a standby state. At this point if the conditions are stable and valid for thirty seconds switch to an operating state.

State	Descritpion
STANDBY	No output
OPERATIVE	Discharge – Charge Icost – Charge Vcost - Maintenance

Necessary condition for the start of Mercurio:

- Batteries connected and correct voltage range
  - Vbatt > N[(1)]*9V
  - Vbatt < N*16V
- Rectified voltage appropriate
  - Vhp > 15V
  - Vhp < 160V
- Temperature in the range of operation
  - Tcase < 75°C
  - Theatsink < 70°C

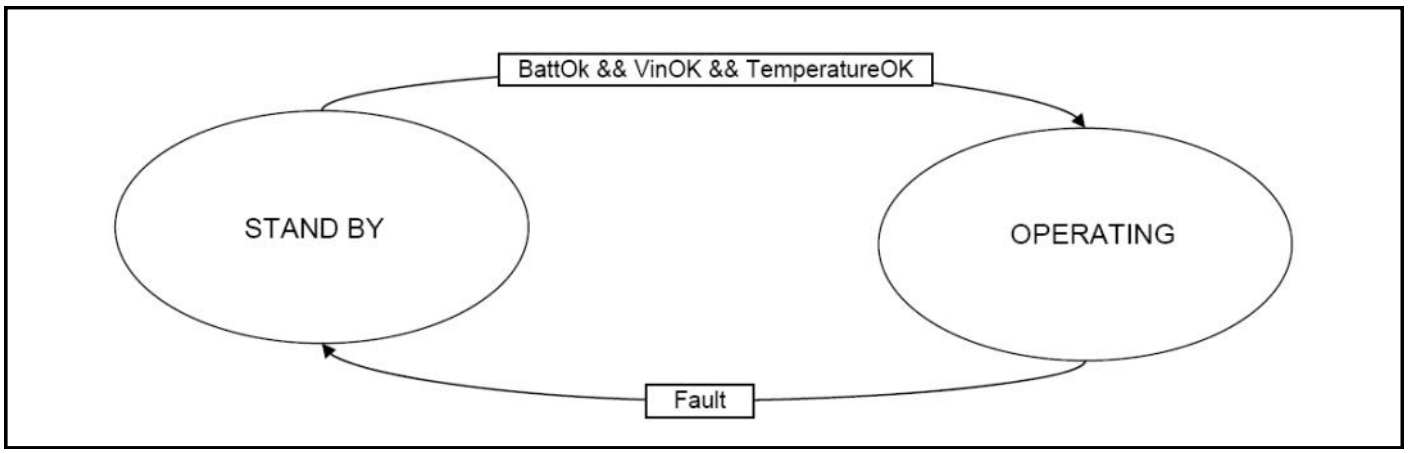

Figure 3: Main FSM.

The battery charge Mercurio has the ability to work with three different control modes of generator, are:

- ONOFF
- Dual Speed
- Variable Speed

NOTE[(1)] N number of nominal elements 12V.

4.1 Mode ONOFF

This mode of operation is typical for engines which do not have the possibility of the speed controller.

In the state diagram in Figure 4 we describe in the ONOFF mode.

This mode is the simplest running for the Mercurio, when the battery voltage falls below the set value, the system starts the engine and performs a full charge cycle, upon its completion it will shut down the engine.

To prevent mistake state transitions are necessary to verify the conditions for a sufficient period of time.

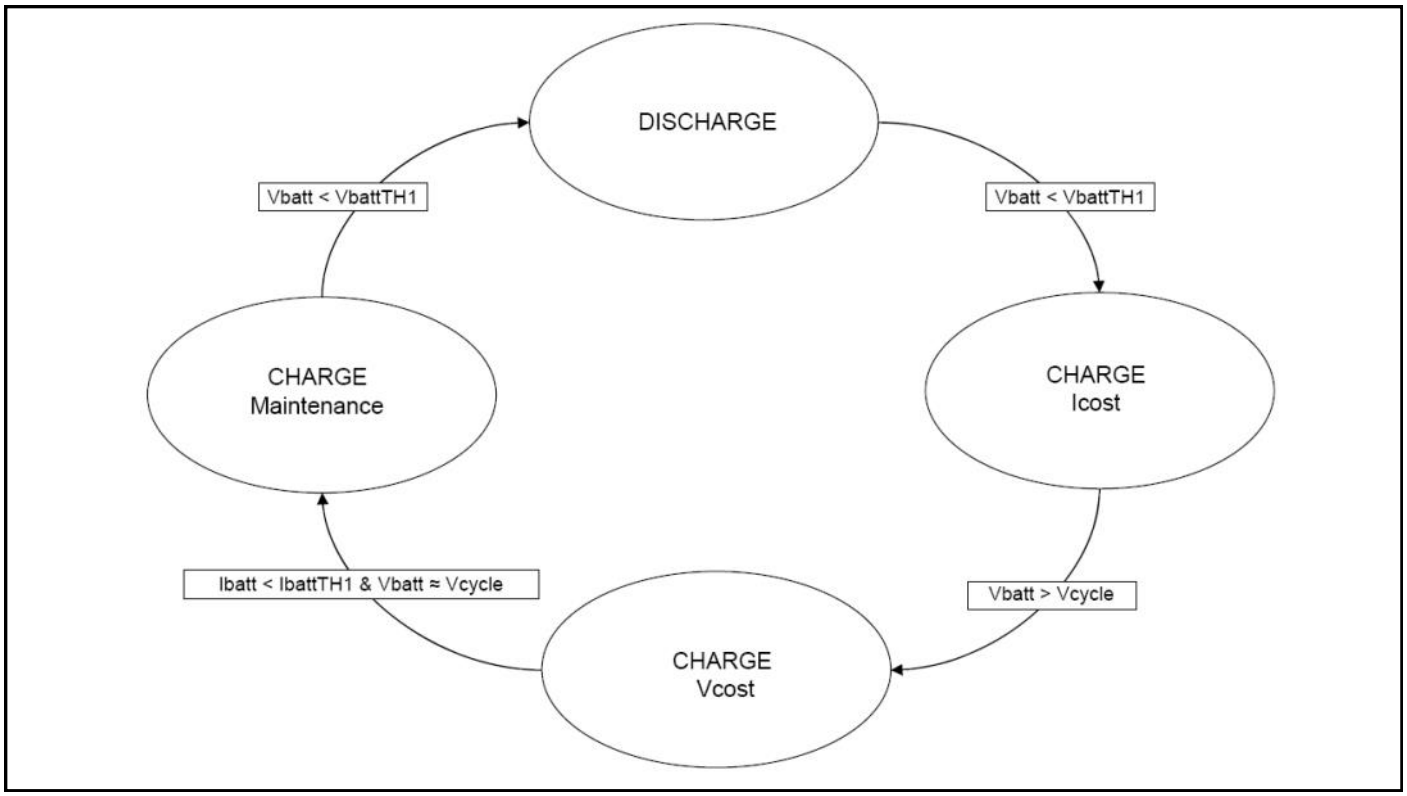

Figure 4: Mode ONOFF.

4.2 Mode Dual Speed

This mode of operation is typical for engines that have the ability to control the speed of two-speed.

This mode is expected that over the driving switch on (and switch off) of the engine, there exists the possibility of controlling two-speed.
Moreover the system has a hysteresis (of current and voltage), that provides stability to the system.

The threshold current is a parameter that must be chosen very carefully, and will be a function of the minimum load and the power available at the two speeds.

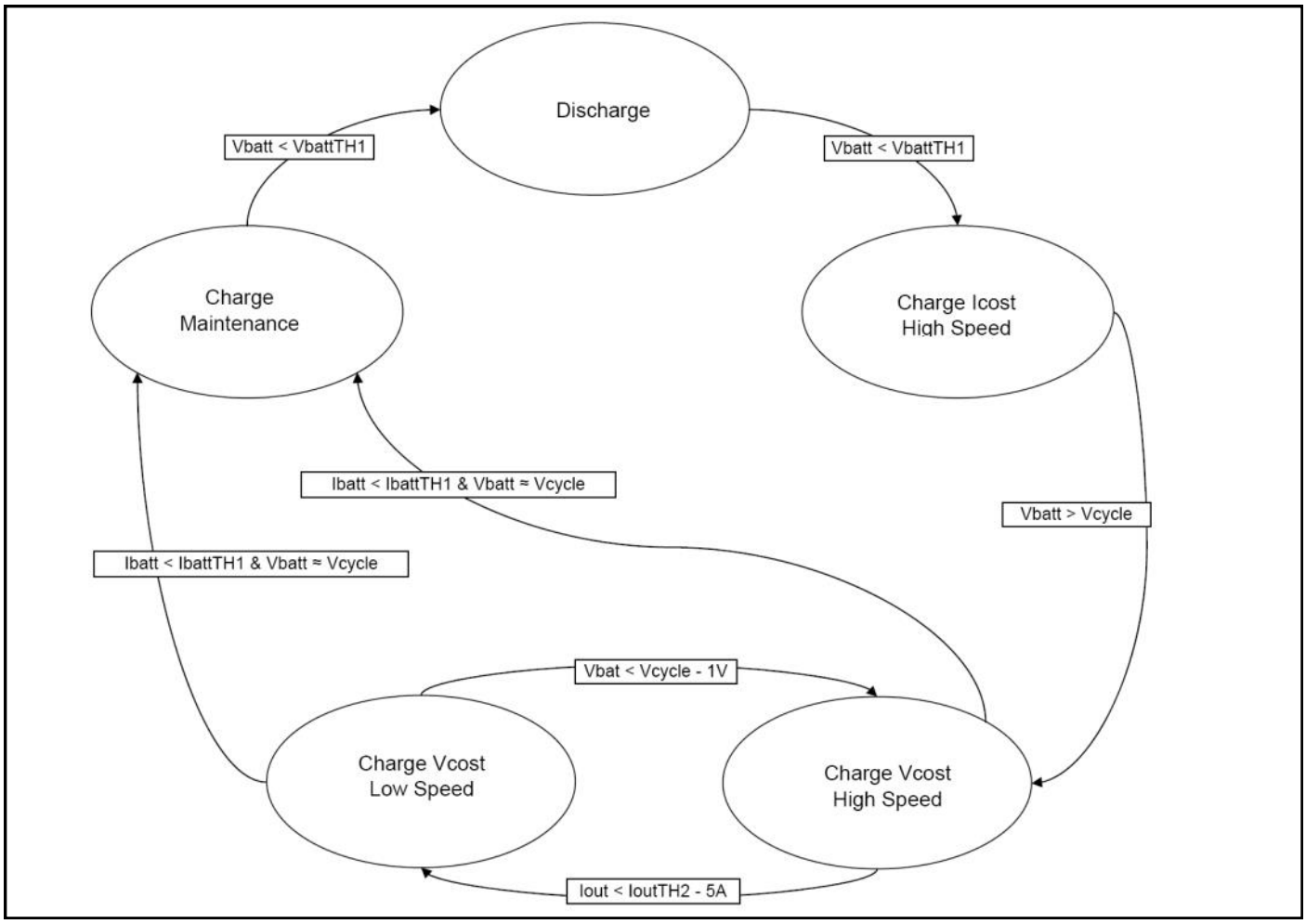

Figure 5: Mode Dual Speed.

4.3 Mode Variable Speed

This mode of operation is typical for engines with facility for variable speed control. It allows the diesel engine to save fuel, modulating the output power as a function of the power required to charge the batteries and power to the load.

This change in power demand will be done via an analogue signal, -10V and 10V, that respectively indicate minimum and maximum power.

To make the system stable every variation of charging current will be delayed, so as to allow the engine to adapt to the new reference.

In all stages of recharging the batteries, the system will create a voltage reference that does not waste power.

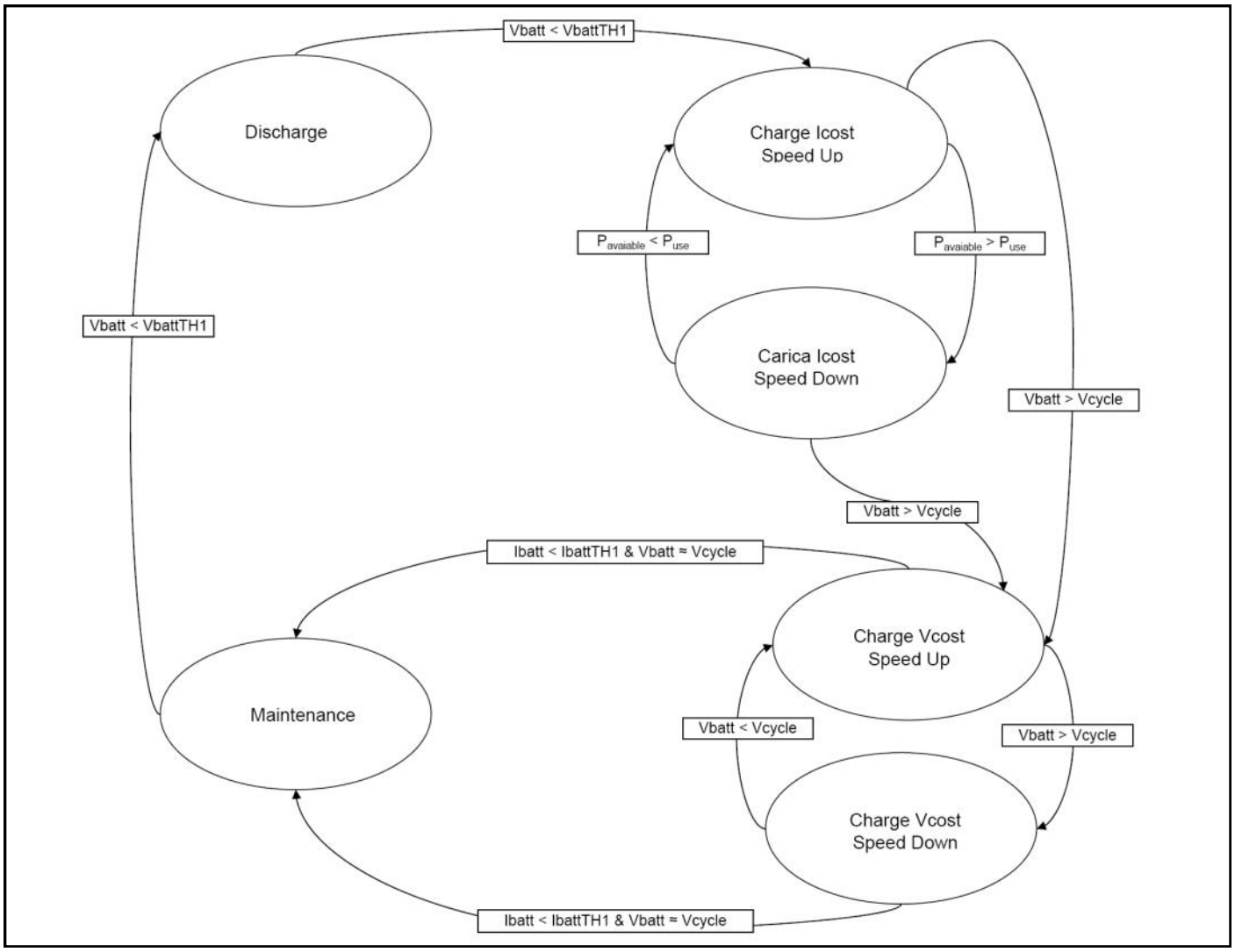

Figure 6: Mode Variable Speed.

5 INPUT

The battery charge Mercurio is capable of working with different input voltages.

- Direct current DC
- Alternating current Single-phase AC1
- Alternating current Three-phase AC3
- Photovoltaic input (AC1DC or AC3DC)

Through the software it will be possible to select the type of input, and when the system works in single phase and is able to recognize if DC or AC1.

For inputs in AC is a protection able to limit the maximum input current that operates on the value of the rectified voltage and the form factor of the input current.
This type of protection is necessary in order not to exceed the maximum current value effectively absorbed.

Care must be taken in evaluating the form factor of the input current that if it does not reflect the real working conditions it can lead to the failure of the charger. For this purpose it is essential to independently measure the (PF) power factor and adjust the software settings accordingly (by the parameter DPF – see page 16 or 19).

5.1 Direct current

DC voltage supply of the charger is capable of delivering the power described in the following graph Figure 7. The limitation is due to the limitation of the input current (50Arms).

The Vhp voltage in practice represents the input voltage (Vhp≈Vin), the voltage can be supplied independently between two of the three terminals available.
In this mode is only available ONOFF mode.

VHP ≈ Vin [V]	Mercurio Power [W]		
	5k	10k	15k
50	2.500	5.000	7.500
55	2.750	5.500	8.250
60	3.000	6.000	9.000
65	3.250	6.500	9.750
70	3.500	7.000	10.500
75	3.750	7.500	11.250
80	4.000	8.000	12.000
85	4.250	8.500	12.750
90	4.500	9.000	13.500
95	4.750	9.500	14.250
100	5.000	10.000	15.000
105	5.000	10.000	15.000
110	5.000	10.000	15.000
115	5.000	10.000	15.000
120	5.000	10.000	15.000
125	5.000	10.000	15.000
130	5.000	10.000	15.000
135	5.000	10.000	15.000
140	5.000	10.000	15.000
145	5.000	10.000	15.000
150	5.000	10.000	15.000
155	5.000	10.000	15.000
160	5.000	10.000	15.000
165	5.000	10.000	15.000
170	5.000	10.000	15.000

Table 1: Limit of power as function Vhp (DC).

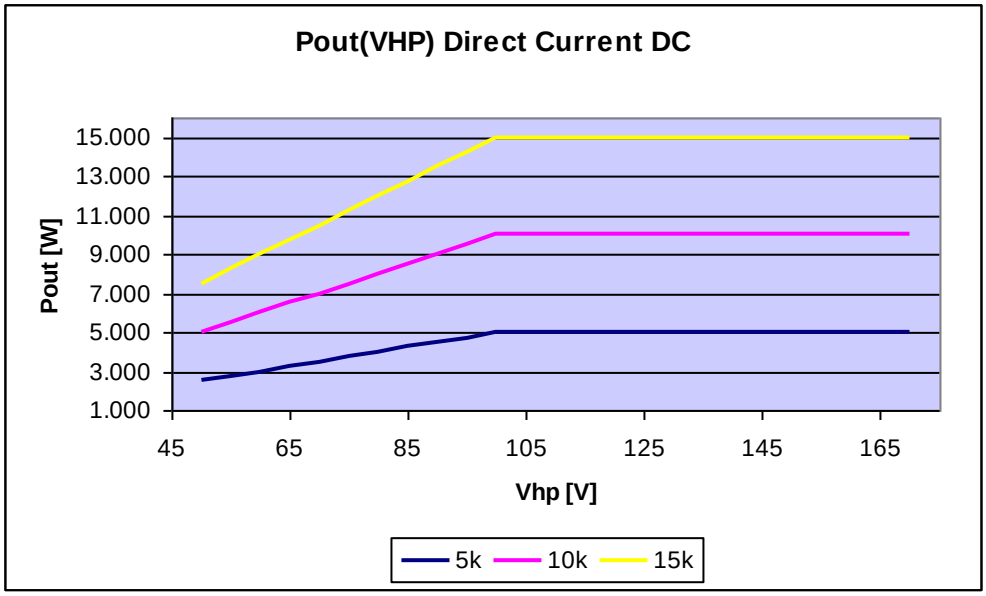

Figure 7: Maximum power versus VHP (voltage input).

5.2 Single-phase alternating current AC1

5.2.1 Voltage limit

Limitation due to the input voltage.

	Vff – Vfn [V]	Vhp [V]	Pphase [W]		
	Alternate input	Rectfier input voltage			
			5k	10k	15k
Deration applies	30	42	1.500	3.000	4.500
	35	49	1.750	3.500	5.250
	40	57	2.000	4.000	6.000
	45	64	2.250	4.500	6.750
	50	71	2.500	5.000	7.500
	55	78	2.750	5.500	8.250
	60	85	3.000	6.000	9.000
	65	92	3.250	6.500	9.750
	70	99	3.500	7.000	10.500
	75	106	3.750	7.500	11.250
	80	113	4.000	8.000	12.000
	85	120	4.250	8.500	12.750
	90	127	4.500	9.000	13.500
	95	134	4.750	9.500	14.250
Ok	100	141	5.000	10.000	15.000
	105	148	5.000	10.000	15.000
	110	156	5.000	10.000	15.000
	115	163	5.000	10.000	15.000
	120	170	5.000	10.000	15.000
	125	177	5.000	10.000	15.000
	130	184	5.000	10.000	15.000

Table 2: Limit of power as function Vhp (AC1).

The Table 2 valid for DPF (pure sine wave input) values obtained with maximum input current of 50Arms.

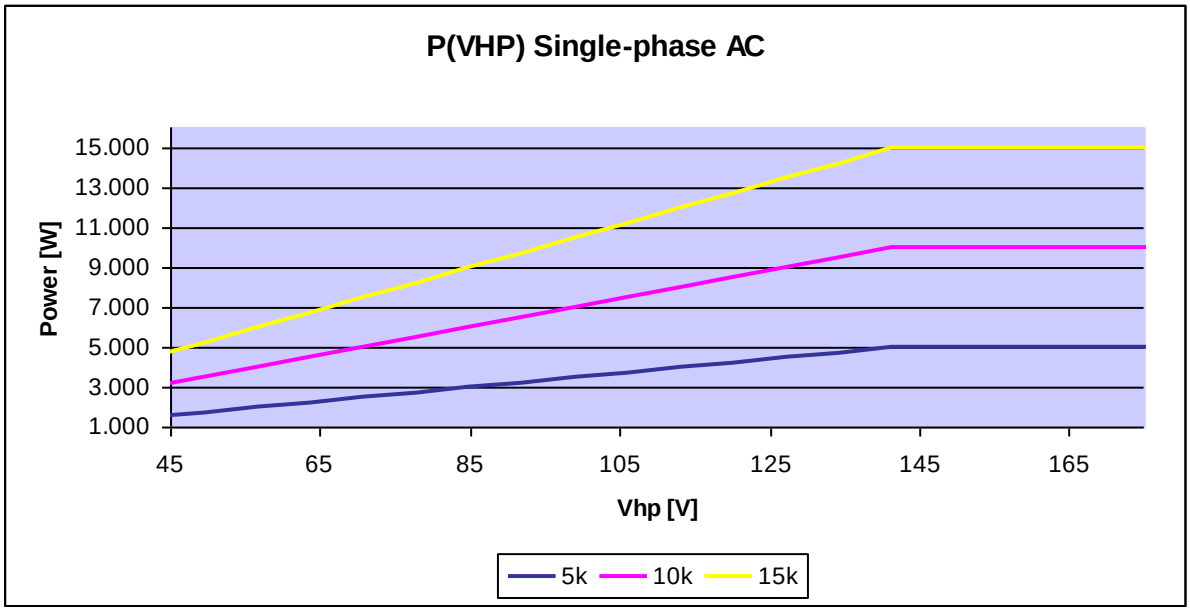

Figure 8: Maximum power available as a function of Vhp(AC1).

5.2.2 Form factor (D.P.F.)

The value of the impedance of the generator conditions the effective current input and therefore the power supplied by Mercurio.

The voltage can be provided between two of the three input terminals so indifferent.

Not knowing the impedance of the alternator we have included a parameter that allows you to make an adjustment, not to exceed 35Arms Mercurio.

The DPF game is this parameter, which will act as a percentage of the voltage limitation (Table 2).

5.2.3 Frequency limit

Mercurio can be supplied with single-phase AC 120V maximum value to avoid exceeding the maximum rectified voltage, and high frequency (100Hz to 400Hz) to prevent excessive ripple on the same rectified.

Frequency [Hz]	Maximun Out Power [W]		
	5k	10k	15k
20	0	0	0
25	150	300	450
30	816	1.632	2.448
40	1.650	3.300	4.950
50	2.150	4.300	6.450
75	2.816	5.632	8.448
100	3.150	6.300	9.450
200	3.650	7.300	10.950
300	3.816	7.632	11.448
400	3.900	7.800	11.700

Table 2: Derating[(2)] frequency AC1.

NOTE[(2)]: If fixed speed 50Hz input as an example, the AC1 single phase input will limit the output of the Mercurio system!

5.3 Three-phase alternating current AC3

5.3.1 Voltage limit

Limitation due to the input voltage.

	Vff [Vrms]	Vhp [V]	Pphase [W]	Ptot [W]	Pphase [W]	Ptot [W]	Pphase [W]	Ptot [W]
	Alternate input voltage	Rectifier input voltage	**5k**		**10k**		**15k**	
Deration applies	30	42	1.500	4.500	3.000	9.000	4.500	13.500
OK	40	57	1.667	5.000	3.334	10.000	5.000	15.000
	50	71	1.667	5.000	3.334	10.000	5.000	15.000
	60	64	1.667	5.000	3.334	10.000	5.000	15.000
	70	78	1.667	5.000	3.334	10.000	5.000	15.000
	80	92	1.667	5.000	3.334	10.000	5.000	15.000
	90	85	1.667	5.000	3.334	10.000	5.000	15.000
	100	99	1.667	5.000	3.334	10.000	5.000	15.000
	110	113	1.667	5.000	3.334	10.000	5.000	15.000
	120	106	1.667	5.000	3.334	10.000	5.000	15.000

Table 4: Limit of power AC3.

The Table 4 valid for size 5k and DPF (pure sine wave input) values obtained with maximum input current of 50Arms.

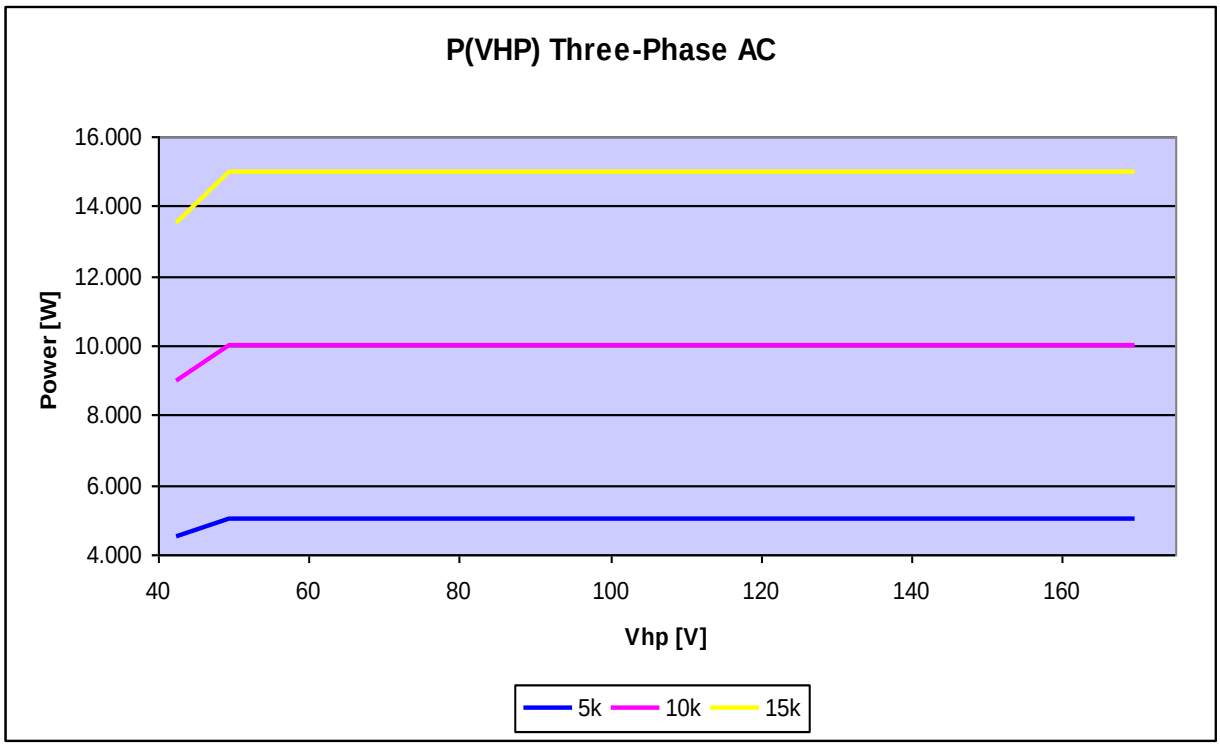

Figure 9: Maximum power available as a function of Vhp(AC3).

5.3.2 Form factor (D.P.F.)

The value of the impedance of the generator conditions the effective current input and therefore the power supplied by Mercurio.



Not knowing the impedance of the alternator we have included a parameter that allows you to make an adjustment, not to exceed 50Arms Mercurio.

The DPF game is this parameter, which will act as a percentage of the voltage limitation (Table 4).

5.3.3 Frequency limit

The charger is capable of delivering the full power from ~33Hz upwards.

	Frequency [Hz]	Power [W]		
		5k	**10k**	**15k**
Deration applies	10	0	0	0
	12	1.050	2.100	3.150
	14	1.942	3.884	5.826
	16	2.612	5.224	7.836
	18	3.133	6.266	9.399
	20	3.550	7.100	10.650
	22	3.890	7.780	11.670
	24	4.175	8.350	12.525
	26	4.415	8.830	13.245
	28	4.621	9.242	13.863
	30	4.800	9.600	14.400
	32	4.956	9.912	14.868
Ok	34	5.000	10.000	15.000
	36	5.000	10.000	15.000

Table 5: Frequency derating AC3.

NOTE[(2)]: If fixed speed 50Hz input as an example, the AC1 single phase input will limit the output of the Mercurio system!

5.4 Photovoltaic input

Mercurio allows you to charge the batteries through a PV input, more precisely in the maintenance phase.

This mode is activated when modes are selected AC1DC and AC3DC.

After the constant voltage phase, selecting this mode, the Mercurio enters the maintenance phase (RL3 close).

RL3	OPEN	CLOSE
	Discharge Icost Vcost	Maintenance (if AC1DC or AC3DC selected)

Not having dedicated inputs for the photovoltaic mode, you must properly configure the installation (see figure below). That is with a switch that allows you to select the desired input AC or PV, commanded by Relay3 Mercurio.

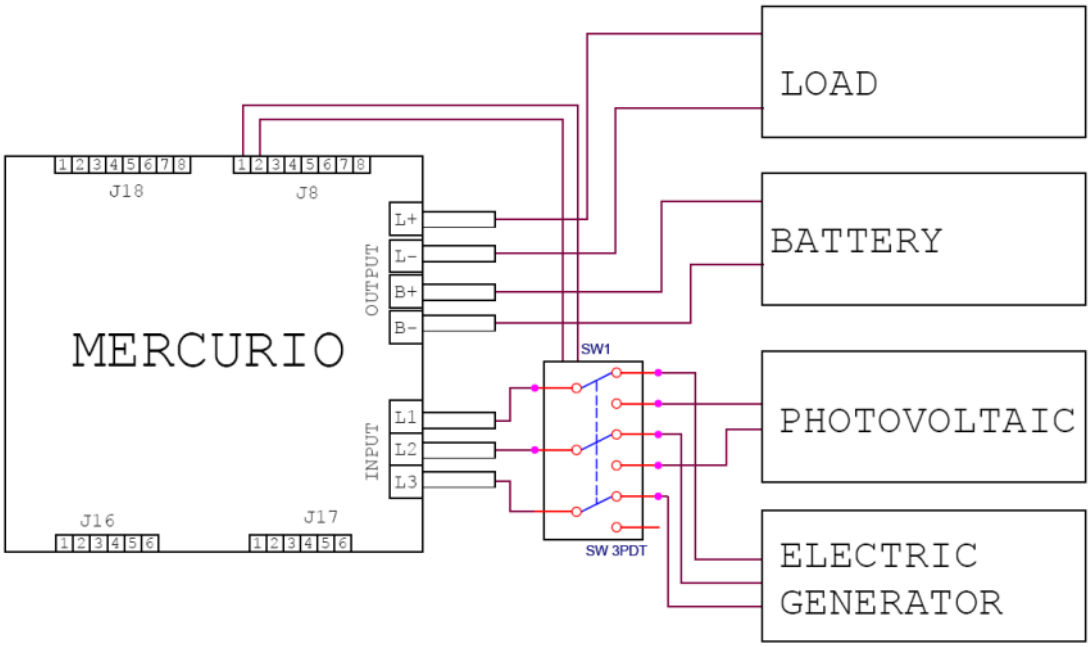

During the maintenance phase of the Mercurio will search MPPT, accordance with the limits of battery and input current (relative to those in DC 5.1).

The open circuit voltage photovoltaic input must not exceed the limit of the maximum input voltage of 170VDC.

5.5 Other limitations

In this section you will learn all the other limitations that make the machine.

5.5.1 Output Power

The Mercurio battery charger has a power derating, which does not allow it to exceed the maximum rated power. eg for Mercurio 5k the charger will reduce its power output so as not to exceed 5000W.

Mercurio	Max Power Out Allowed
5k	5.000 W
10k	10.000 W
15k	15.000 W

5.5.2 Output Current

The Mercurio battery charger has a current limit, which does not allow it to exceed the maximum rated current. eg for Mercurio 5k the charger will reduce its power output so as not to exceed 100A (load & battery).

Mercurio	Max Corrent Allowed [A]
5k	100
10k	200
15k	300

5.5.3 Temperature

The charger will derate according to over temperature. However, if the temperature becomes too high then it will stop charging.
The system detects three temperatures the battery, inside the Mercurio enclosure and heatsink, but only on the last two for power output derating. The battery temperature is used in a separate control logic.

Temperature	Range derating [°C]	Fault [°C]
Internal (enclosure)	75 ÷ 85	>85
Heatsink	70 ÷ 80	>80

In the Table 6 you can see the value of derating applied with respect to available power, moreover apply the derating higher of the two temperatures.

Temp Enclosure [°C]	Temp Heatsink [°C]	Power available [%]
75,00	70,00	100,00
75,50	70,50	95,51
76,00	71,00	91,02
76,50	71,50	86,52
77,00	72,00	82,03
77,50	72,50	77,54
78,00	73,00	73,05
78,50	73,50	68,55
79,00	74,00	64,06
79,50	74,50	59,57
80,00	75,00	55,08
80,50	75,50	50,59
81,00	76,00	46,09
81,50	76,50	41,60
82,00	77,00	37,11
82,50	77,50	32,62
83,00	78,00	28,13
83,50	78,50	23,63
84,00	79,00	19,14
84,50	79,50	14,65
85,00	80,00	10,16
85,50	80,50	5,66
86,00	81,00	1,17

Table 6: Derating Power versus Temperature.

6 BATTERY

The charging voltage of the battery is heavily dependent on the operating temperature.

This dependence requires the inclusion of an external probe to be applied in proximity of the batteries.

The thermal coefficient of lead-acid batteries[3] is ~31.25 mV/°C for full charge and ~15.625 mV/°C for maintenance.

	Full charge (Vcycle)	Maintenance (Vstandby)
Tamb [°C]	**Voltage element [V]**	
-30	16,23	14,38
-25	16,08	14,30
-20	15,92	14,22
-15	15,77	14,14
-10	15,61	14,06
-5	15,45	13,98
0	15,30	13,91
5	15,14	13,83
10	14,98	13,75
15	14,83	13,67
20	14,67	13,59
25	14,52	13,52
30	14,36	13,44
35	14,20	13,36
40	14,05	13,28
45	13,89	13,20
50	13,73	13,13
55	13,58	13,05
60	13,42	12,97

Figure 9: Voltage battery charging vs. temperature.

NOTE[3]: Nominal elements 12V.

7 TECHNICAL CHARACTERISTICS

Models	Mercurio 5k	Mercurio 10k	Mercurio 15k	
INPUT				
Voltage range (phase)	35÷120			V
Max. Current (phase)	50	100	150	A
Range of frequency	DC÷400			Hz
OUTPUT DC				
Voltage range	20÷75			V
Nominal Voltage	12÷60			V
Max. Current	100	200	300	A
Rated power	5.000	10.000	15.000	W
Ripple	<1			%
PERFORMANCE				
Operating temperature environment	-25 ÷ 55			°C
Max temperature Heat sink	80			°C
Max efficiency	92,5			%
Operating humidity	10 ÷ 90 (RH)			%
PROTECTION				
Over temperature	Yes/derating			
Overload	Yes/derating			
Overvoltage	Yes			
Short Circuit	Yes			
Battery inversion	Yes			
Ventilation	External			
DATA				
Dimensions (h w d)	290x370x400	290x670x400	290x970x400	mm
Weight	~20	~40	~60	kg
IP protection	65			
INTERFACE AND COMMUNICATION				
Interface	RS232			
Visual indication	2 x LEDs (connection points only, LEDS by others)			
Relay	3 x 230V 30A			
Isolated Output voltage	-10 / +10V (adjustable range)			

Table 7: Technicals Characteristics.

8 EFFICIENCY

Efficiency obtained with the version 5kW.

Current [A]	Eff. [%]
10	81,1
25	90,0
50	92,5
75	91,9
100	91,3

Table 8: Efficiency measured.

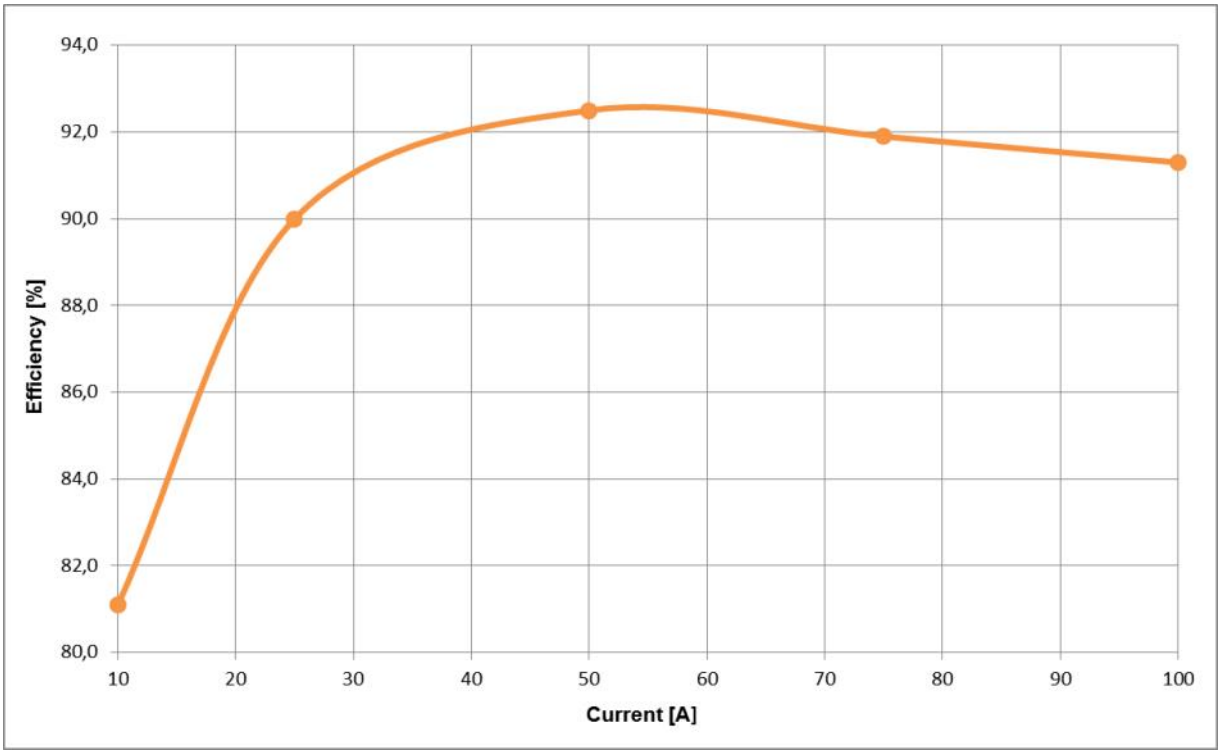

Figure 10: Performance graph as a function of power.

9 MECHANICAL FIXING AND VENTILATION

To allow the Mercurio to work in the best conditions, the mounting configuration is as shown in the figure below, with electrical contacts on the top.

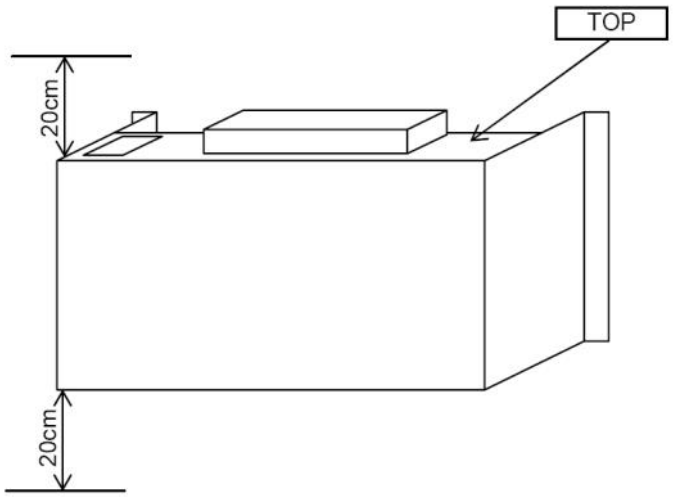

For the proper functioning of the machine it requires forced ventilation, which is made by fans powered directly from the batteries but their command is discriminated from the Mercurio.

The number of fans required depends on the size, but we have a basic element that holds an Air Flow 220.8 m³/h.

Mercurio	Number of fan
5k	2
10k	4
15k	6

The fans are fixed directly to Mercurio, the only precaution by the installer will be to ensure proper airflow, allow free ventilation for at least 20cm (from all sides of Mercurio).

10 ELECTRICAL CONNECTION

The possible electrical configurations are four:

1. Three phases (AC3)
2. Three phases + photovoltaic (AC3DC)
3. Single phase (AC1 or DC1)
4. Single phase + photovoltaic (AC1DC)

In the diagram below we see the typical electrical connection for the apparatus.

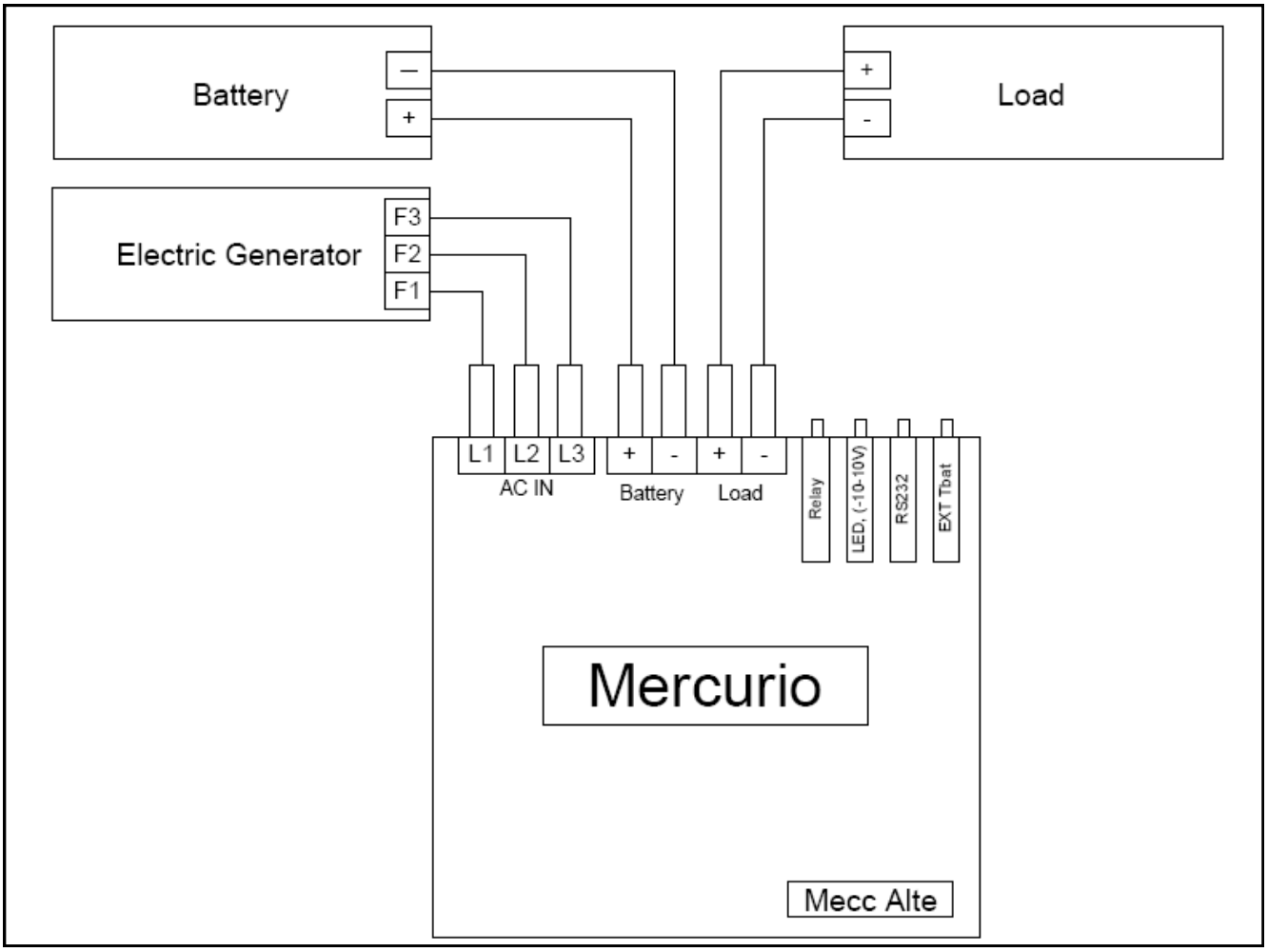

Figure 11: Typical electric connection.

Mercurio can accept either a three phase to single phase, but for correct recognition to occur in single-phase mode, the inputs must be connected in an appropriate manner.

Input mode	Connection mode
AC3	L1-L2-L3
AC1 or DC1(PV)	L1-L2

It is really important not to refer any input system to ground.
Addition, as provided by the telecom standard, you can connect the positive battery terminal to the ground.

10.1 Power connection

Short description of the scheme:

- AC In : voltage input to generator
- Battery: voltage output to battery
- Battery: voltage output to load
- Relay: Number 3 relay for remote control of electric generator and one for photovoltaic mode.
- LED: LEDs of state
- RS232: communication interface
- EXT Tbat: input for external battery temperature sensor.

The power contacts can be fixed with a torque of 24 Nm, because we use nuts and bolts class 4.8.

Disconnect equipment
after disconnecting the batteries, wait at least 2 minutes and then to short-circuit the battery terminals to zero the remaining charge.

10.1.1 Wire sizing

Pay attention to the sizing of cables for connection of Mercurio, because the currents are very high. The following section may be used to calculate the wire size requirements.

Name	Description		Note
R	Resistance	Ω	calculated
L	Cable length	m	depends on the system
S	Area of the cable	mm²	calculated
ρ	Electrical resistivity	Ω mm² / m	constant depends on the cable
V	Voltage drop	V	to be set
I	Current Cable	A	to be set
P	Power loss (cable)	W	calculated

Resistance is:

$$R = \rho \frac{l}{S}$$

or also:

$$R = \frac{V}{I}$$

Derive the section:

$$S = \rho \cdot l \cdot \frac{I}{V}$$

considering the power loss over the cable

$$P = V \cdot I$$

For example:

- L = 5m (round-trip)
- ρ = 0.0174 Ω mm² / m (copper)
- V = 0.5V (to be chosen)
- I = 50A

Obtain:

- S = 8.7 mm²
- R = 0.01 Ω
- P = 25W

Obviously it is recommended to keep the power connections as short as possible, choosing a low drop voltage is important, because the reading of the battery voltage is carried out on the output terminals of Mercurio.

10.2 Three phases (AC3)

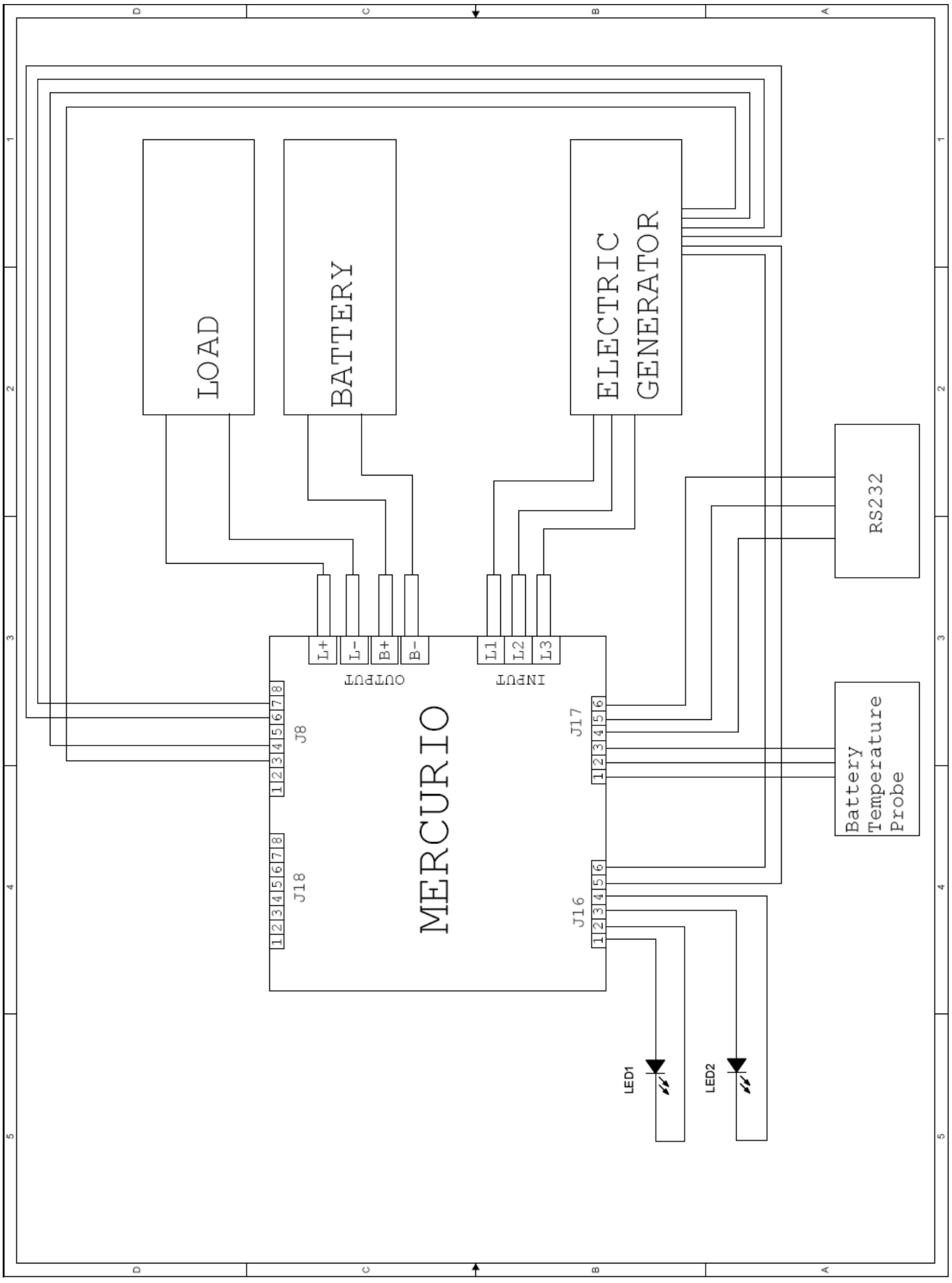

10.3 Three phases (AC3+PV)

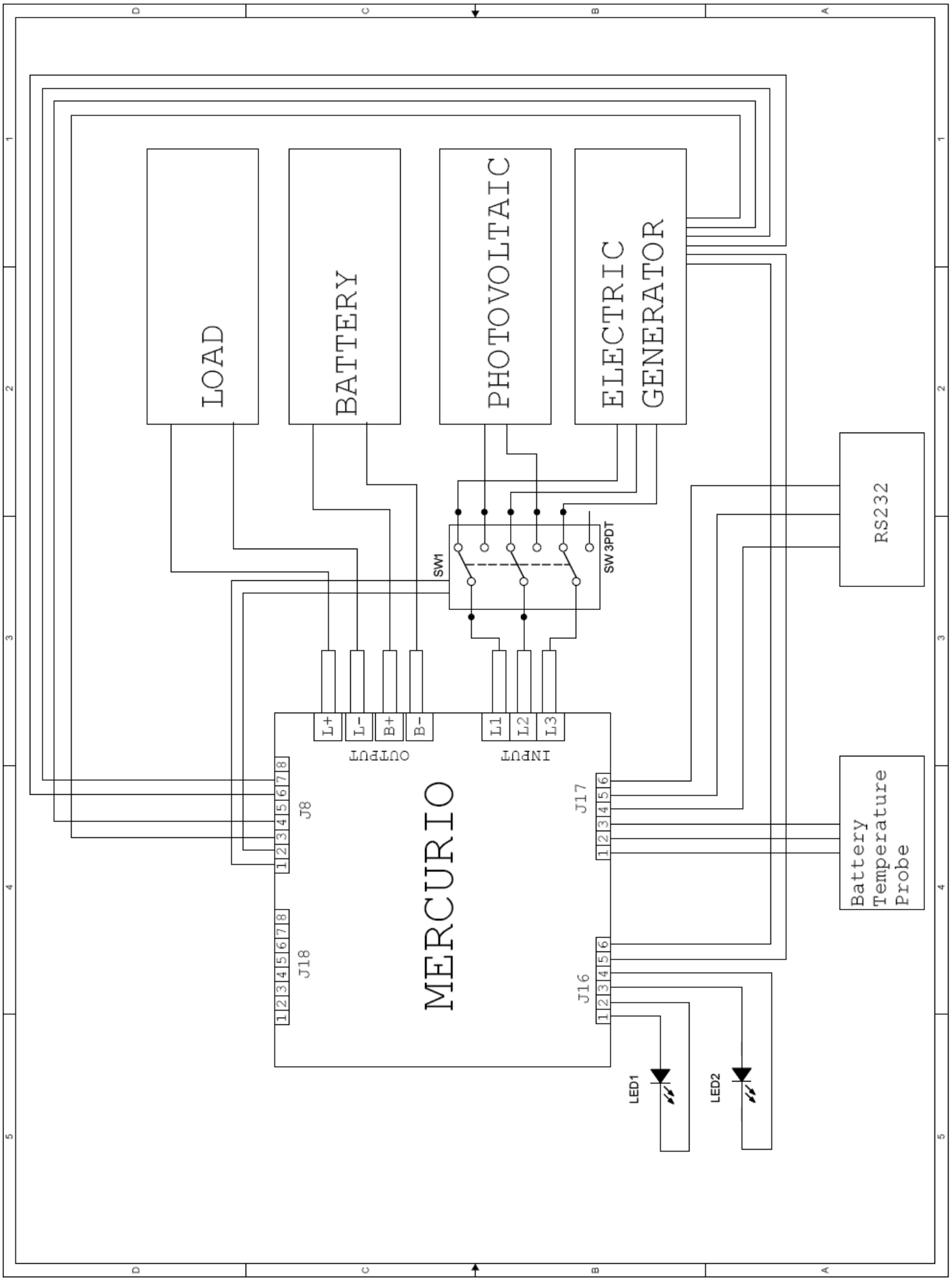

10.4 Single phase (AC1)

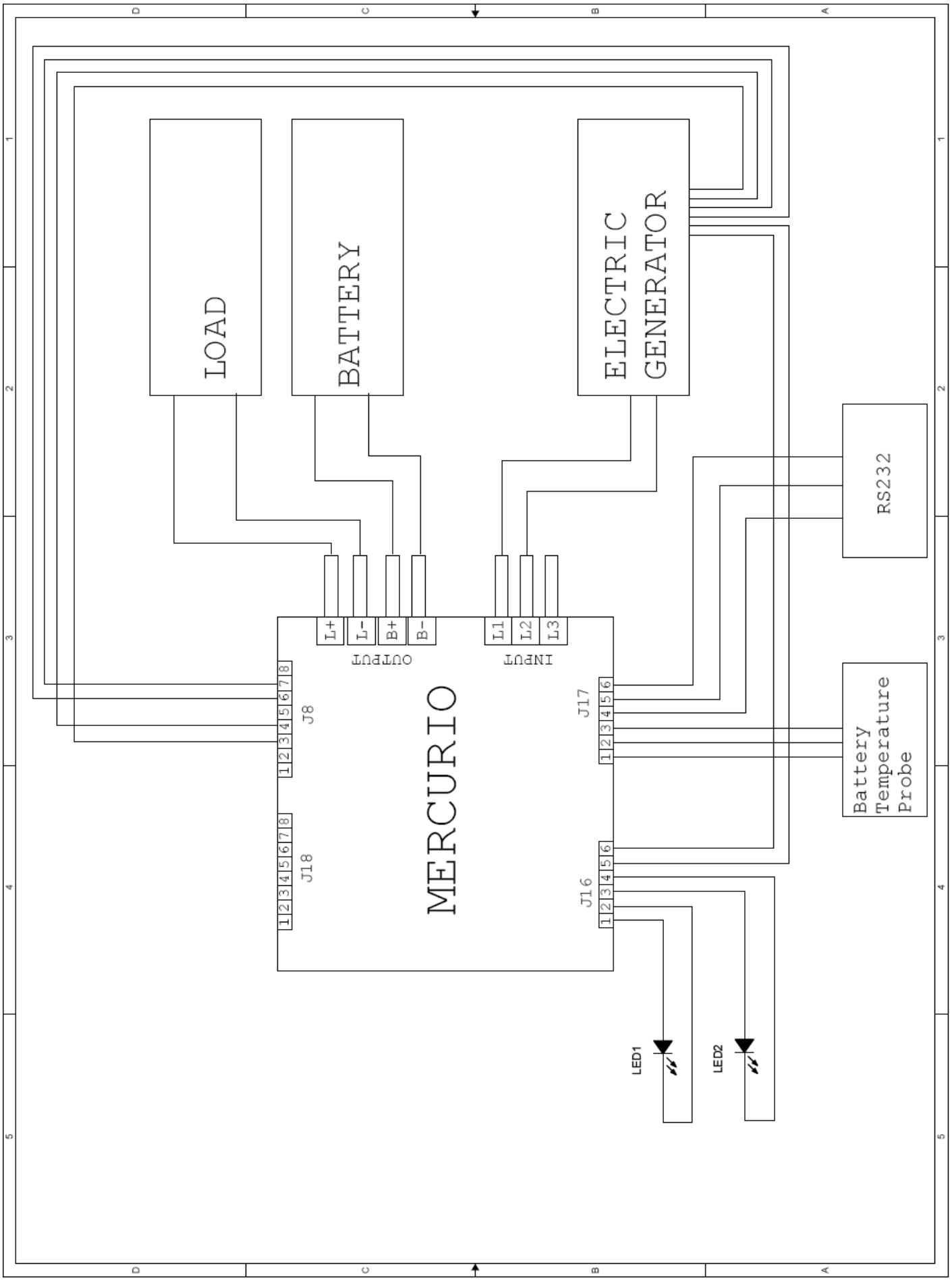

10.5 Single phase (AC1+PV)

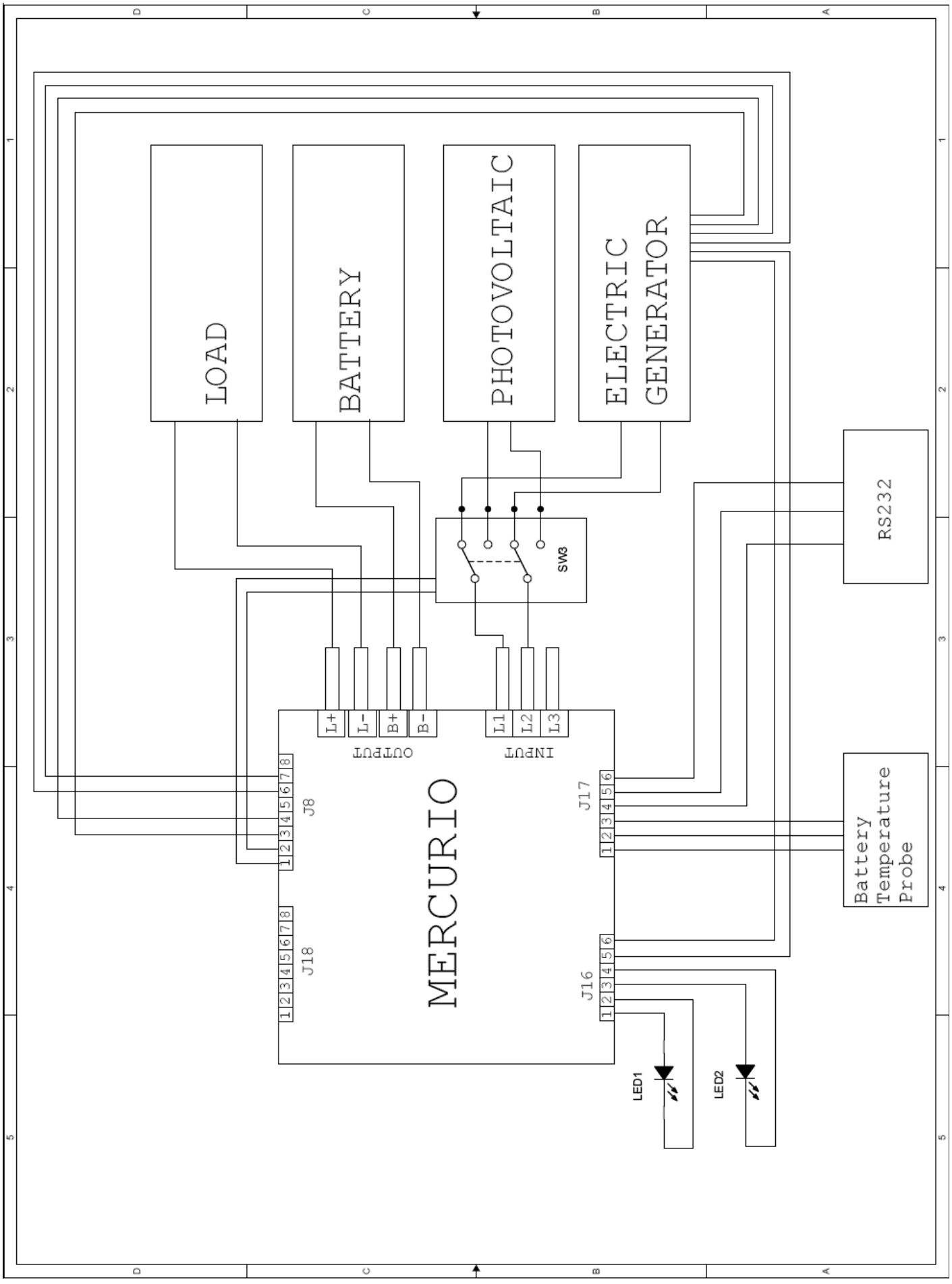

10.6 Signal connection

Removing the cover on the top of Mercurio, you can access the main interface connectors.
On the top of the Mercurio contacts are available for signal and engine control.

The numbering starts from the left.

J8	
1	RL3_COM
2	RL3_NO
3	RL2_COM
4	RL2_NO
5	RL2_NC
6	RL1_COM
7	RL1_NO
8	RL1_NC

J16	
1	LED1
2	GND
3	LED2
4	GND
5	Variable
6	GND

J18	
1	RUN
2	GND
3	SUN
4	GND
5	EPO
6	GND
7	MISC.
8	GND

J17	
1	TS-12V
2	TS-SIGN
3	TS-GND
4	RS232-TX
5	RS232-RX
6	RS232-GND

Table 9: Signal interface.

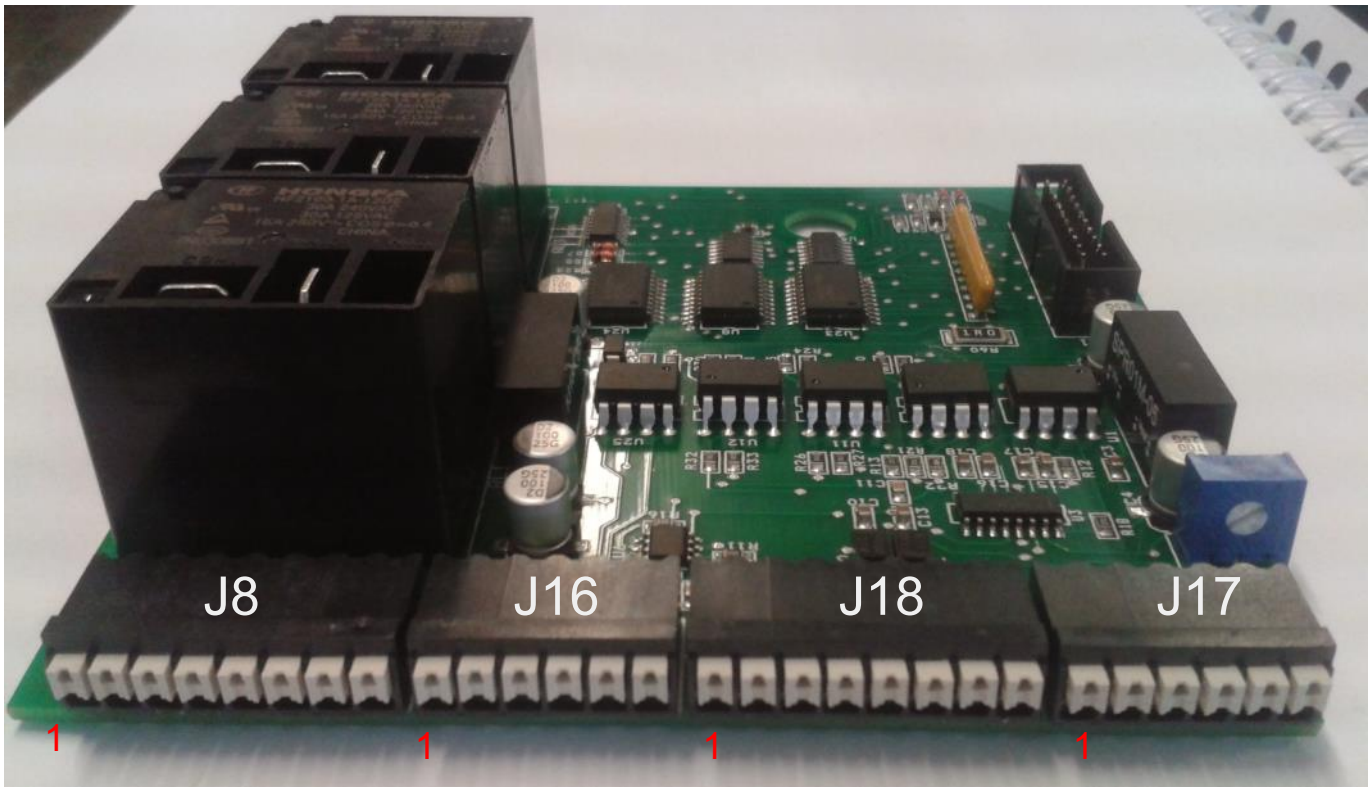

The signal 2J16(GND), 4J16(GND), 6J16(GND), 3J17(TS-GND), 6J17(RS232-GND), 2J18(GND), 3J18 (GND),6J18(GND) and 8J18(GND) have the same electric potential.

The J18 connector the connector is for future upgrades.

NC – Normally Closed (not available for this release)
COM – Common
NA – Normally Open

10.6.1 Relay

Table 10 describes the operations of the relays in different modes[4].

Terminology:

NORMAL refers the relay remaining 'ON' for duration of action i.e. RL1 engaged to start and dis-engaged to stop; RL2 engaged for high speed, disengaged for low speed (in dual speed scenario).
MECHANICAL refers to temporary engaging to activate a function i.e. RL1 engages for pre- set period with frequency sensing to activate the engine start motor; RL2 for stopping (deactivating the fuel solenoid.
All are pre-programmed through the Mercurio software.

	ON OFF or Variable		Dual speed	
	NORMAL	MECHANICAL	NORMAL	MECHANICAL
RL1	Switch On Switch Off	On	Switch On Switch Off	Not allowed
RL2	-	Off	High speed Low speed	Not allowed
RL3	AC3, AC1 or DC input / photovoltaic input			

Table 10: Relay function standard.

In the Figure 13 shows the internal connection of the relay[5], to make a correctly external connection.

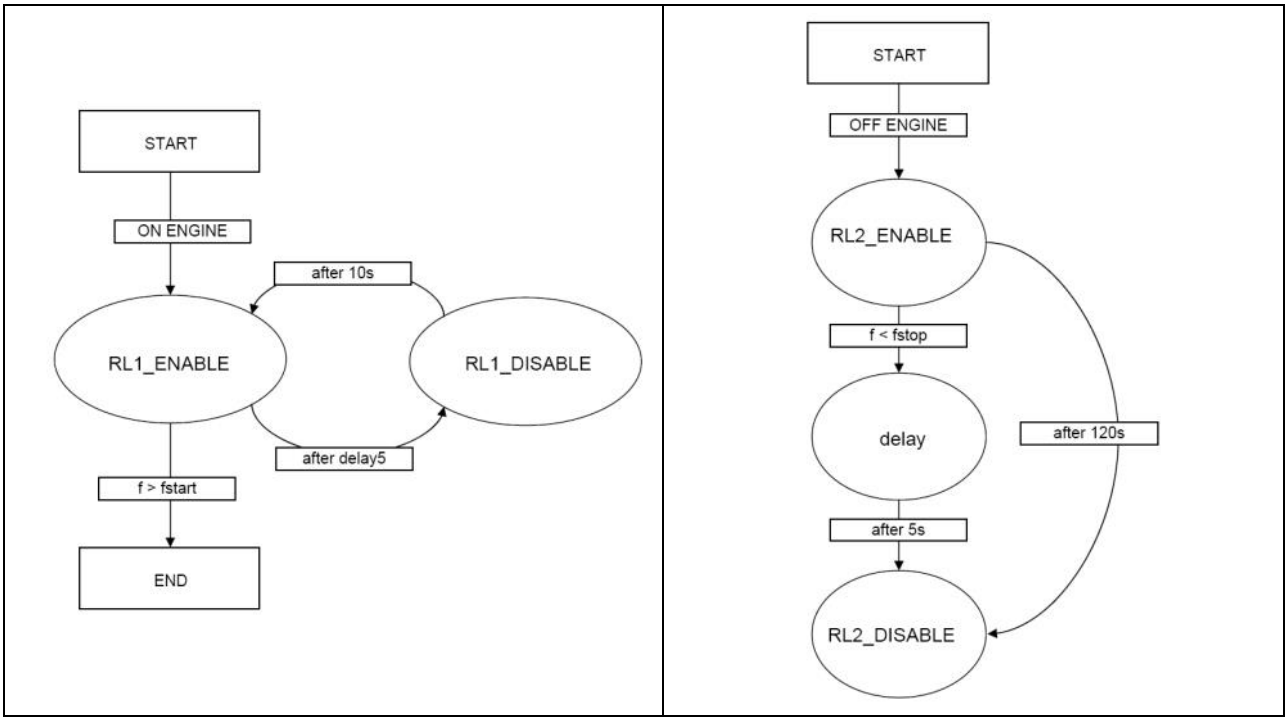

Figure 12: Flowchart of the mechanical mode.

NOTE[4]valid for connections made on the normally open (NO).
NOTE[5]The relays are mounted 30A 250Vac.

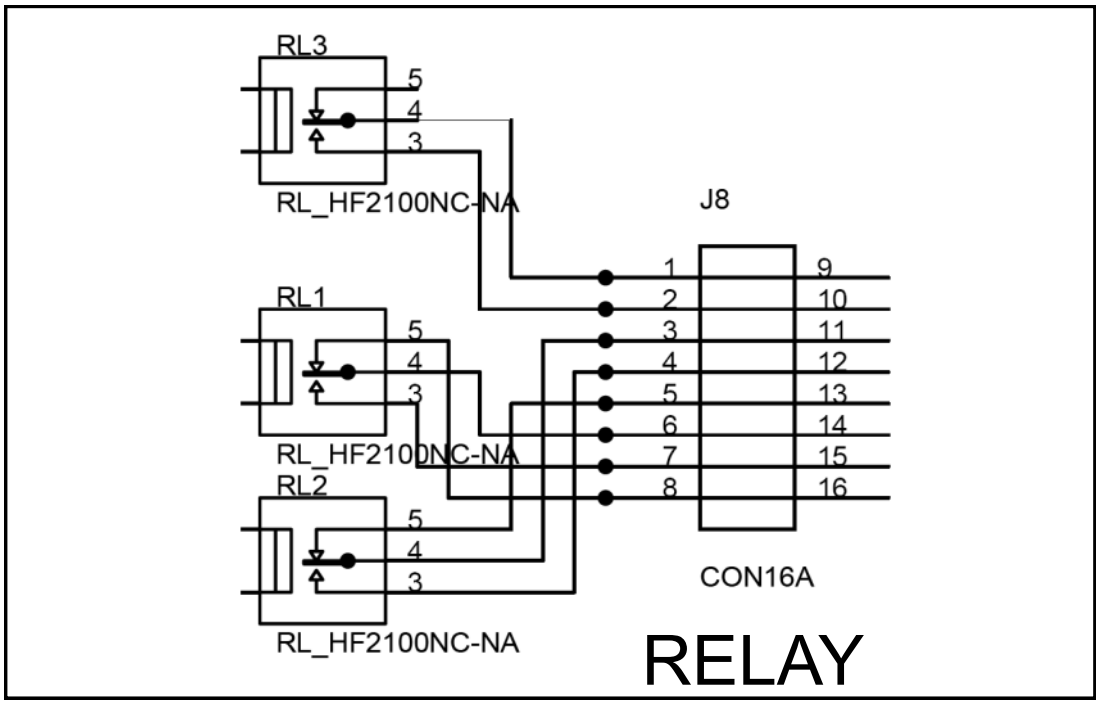

Figure 13: Internal electric connection relay.

Through the software, you can set the polarity of the relay and the mode of operation (Normal, Mechanical).

You must be careful with the configuration of the relay (configuration software and physical connections), to ensure that when the Mercurio is off, the logic preset must not enable any activation to the engine.

In the mechanical mode, there exists a time duration (Max start time - delay5) of the signals to power on and power off. If the power is on, and the Mercurio detects the engine is running, it will cancel the stop command

10.6.2 LED

Mercurio has the opportunity to indicate their status through two LED's, the first indicates the status and the second state of charge of the batteries.

10.6.2.1 LED1

The first LED identifies the status of the Mercurio.

	ON	OFF	BLINK
LED1	Operative	Power off	Fault Or Stand by

When the Mercurio is in standby state the blinking of the LED indicates the reason, as reported in the Table 11.

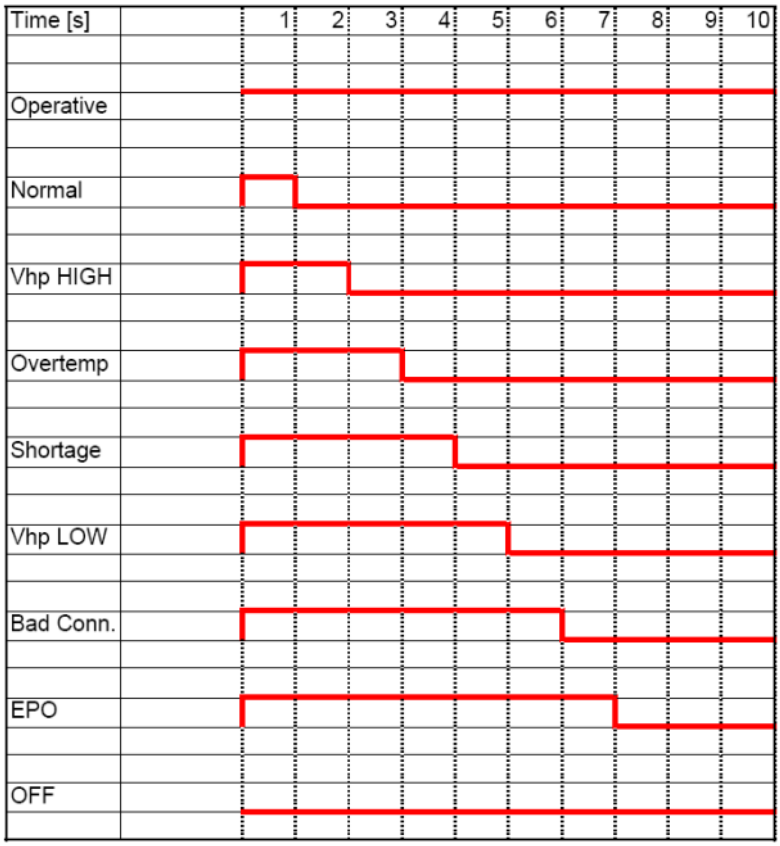

Table 11: Legend blinking.

10.6.2.2 LED2

The second LED identifies the state of charge .

	ON	OFF	BLINK
LED2	Icost	Discharge	Vcost

In the Figure 14 shows the electrical connection of the LEDs, through the connector J16.

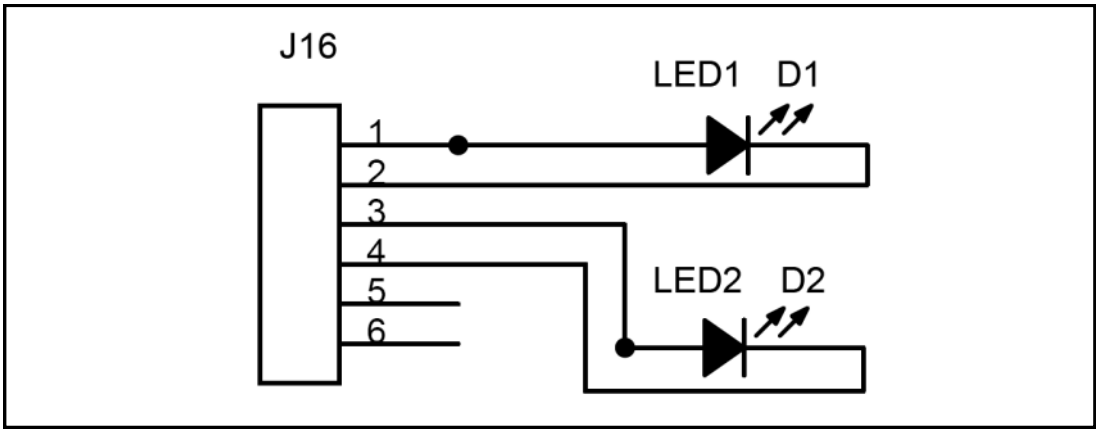

Figure 14: Extern Electric connection LED.

Maximum output LED Current
20 mA

10.6.3 Analogue output

Isolated output is valid when you set the mode to variable speed, and the range of values covered by parameters in the software.

	Minimun	Maximun	
Variable	-10	10	V

Maximum output analogue signal
40 mA

10.6.4 Serial interface RS232

To establish a serial connection with Mercurio it is sufficient to connect the three signals in Table 12.

	DB9	DB15
RX	2	3
TX	3	2
GND	5	7

Table 12: RS232 connection PIN.

10.6.5 Battery temperature sensor

The external temperature sensor is made by a NTC and needs a power supply (supplied by Mercurio). The mode of connection is shown in Figure 15.

Maximum length of the current probe is 10 meters.

Probe	ITF	Color cable	Connection J17
J1	Vcc	Brown	TS-V12
J2 (SQWT)	Tsense	Grey	TS-SIGN
J3	GND_temp	Black	TS-GND

Table 13: Mapping probe and interface.

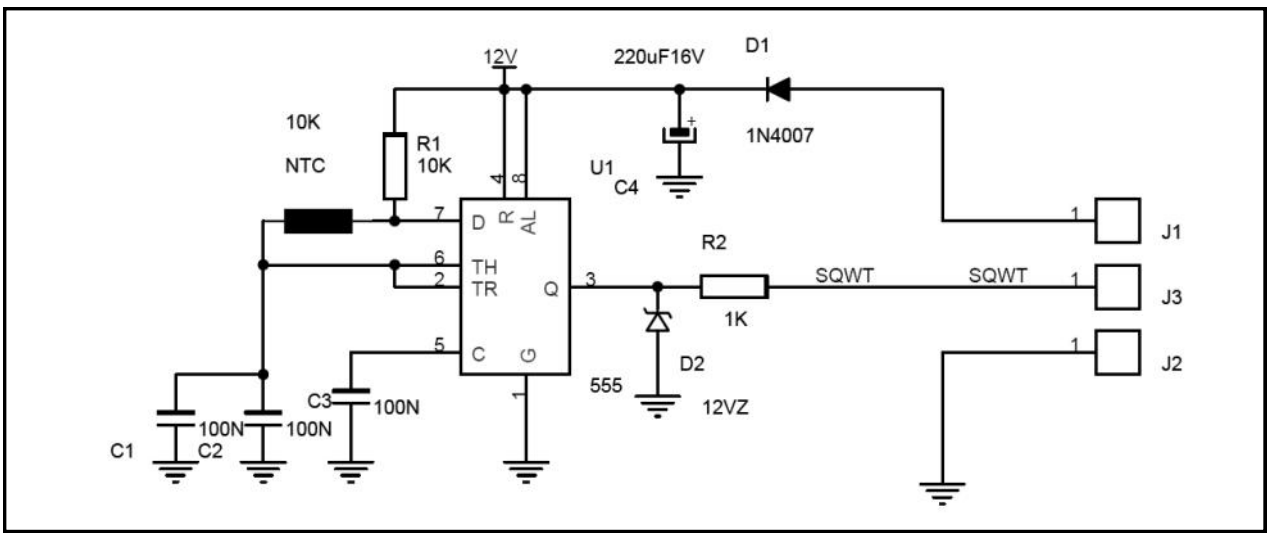

Figure 15: Circuit diagram.

10.6.6 Digital input

The system has isolated inputs that allow you to control the machine without using the management software.
More precisely, the system has 4 isolated inputs:

- RUN
- SUN (not used)
- EPO
- MISC. (not used)

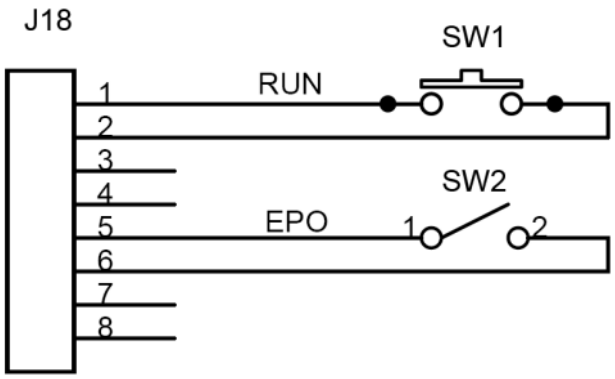

10.6.6.1 RUN

Closing this contact is used to start a cycle of recharging batteries, normally open (available from firmware version 2.0.4).

	1J18-2J18
OPEN	Null
CLOSE	Start a charge cycle

Be careful not to leave the contact is always closed.

10.6.6.2 EPO

Emergency Power Off (available from firmware version 2.0.4).
Opening this contact will result in immediate termination of the charging cycle (if in progress) and the machine will go into standby mode.

	5J18-6J18
OPEN	Stop the charge
CLOSE	Enable to charge

Be careful not to leave the contact is always open.

10.6.7 Power Off

There is a contact that allows you to turn off the device completely (is provided normally closed).

The contact is not directly accessible on the interface board but it is located on the power board, to access it you must remove the main cover.

The connector is the JP11, identified by a red circle in the picture.

To completely turn off the Mercurio is necessary to open the contact, and in the case of multi-board (10k and 15k) will be open all together.

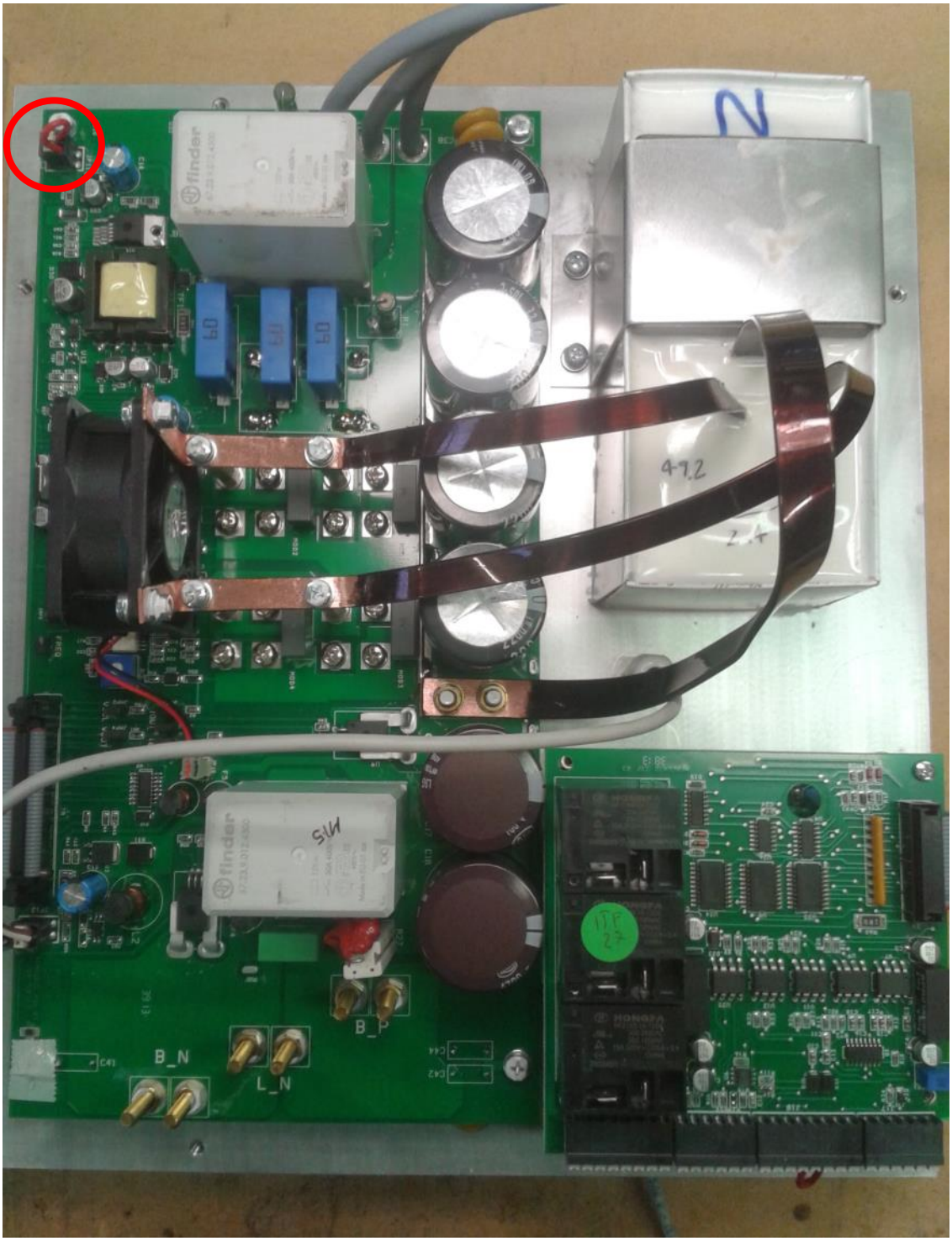

11 FAULT

The machine has protections that interrupt the charging of the batteries, this is necessary to preserve the integrity of the machine.

Type of Fault	Description
VHP HIGH	Rectified voltage exceeds 160V
VHP LOW	Rectified voltage less than 15V
BAD CONN.	Battery voltage out of range. Vbatt < 9V*N[6] or Vbatt > 16V*N
OVERTEMP	Tcase > 80°C Theatsink > 85°C
SHORT CIRCUIT	Iout[7] > 140A (for Mercurio 5k) Iout > 280A (for Mercurio 10k) Iout > 420A (for Mercurio 15k)

Table 14: Fault list.

Following a fault the charger will restart automatically, if the conditions are back to normal.

12 SOFTWARE

For settings and remote control of the Mercurio there is specific software.

The software implement also one

For communicating with the Mercurio:

- One Mercurio
- One MercurioMR3.exe software
- One RS232 interface cable
- This manual
- One warranty certificate
- One PC with Microsoft Windows operating system (win 95 or better)

The software also implements the function of recording, producing logs files, these files will be saved in the same folder where the software resides “log.txt”.

The serial communication port is settable through the following procedure:

1. Select the menu “File”
2. Select “Config ComPort”
3. Do not enter any password, press OK button.
4. Select your com port .

NOTE[6] N number of element 12V nominal.
NOTE[7] Ibatt + Iload

12.1 Set password (for advanced access)



Through this operation you can access more sensitive parameters of Mercurio, to be performed only by an competent authorised person.

There are three different levels of accessibility software:
1. Monitor
2. Administrator
3. Test

MONITOR
This user level allows the visualization of the operating data of Mercurio, the only action that allows is to start a cycle of charge.

ADMINISTRATOR
This user level allows the modification of the parameters of Mercurio, with the exception of Num Bat, Size and Relay mode.
Also enables you to modify the settings, electrical parameters and the possibility of interrupting the charge cycle.

TEST
Full control of the Mercurio, allowing you to change Num bat, size ad Relay mode.

	Password
Monitor	-
Administrator	admin
Test	test

The serial user level is settable through the following procedure:

1. Select the menu “File”
2. Select “Password”
3. Enter the password and press OK button

12.2 Interface SW

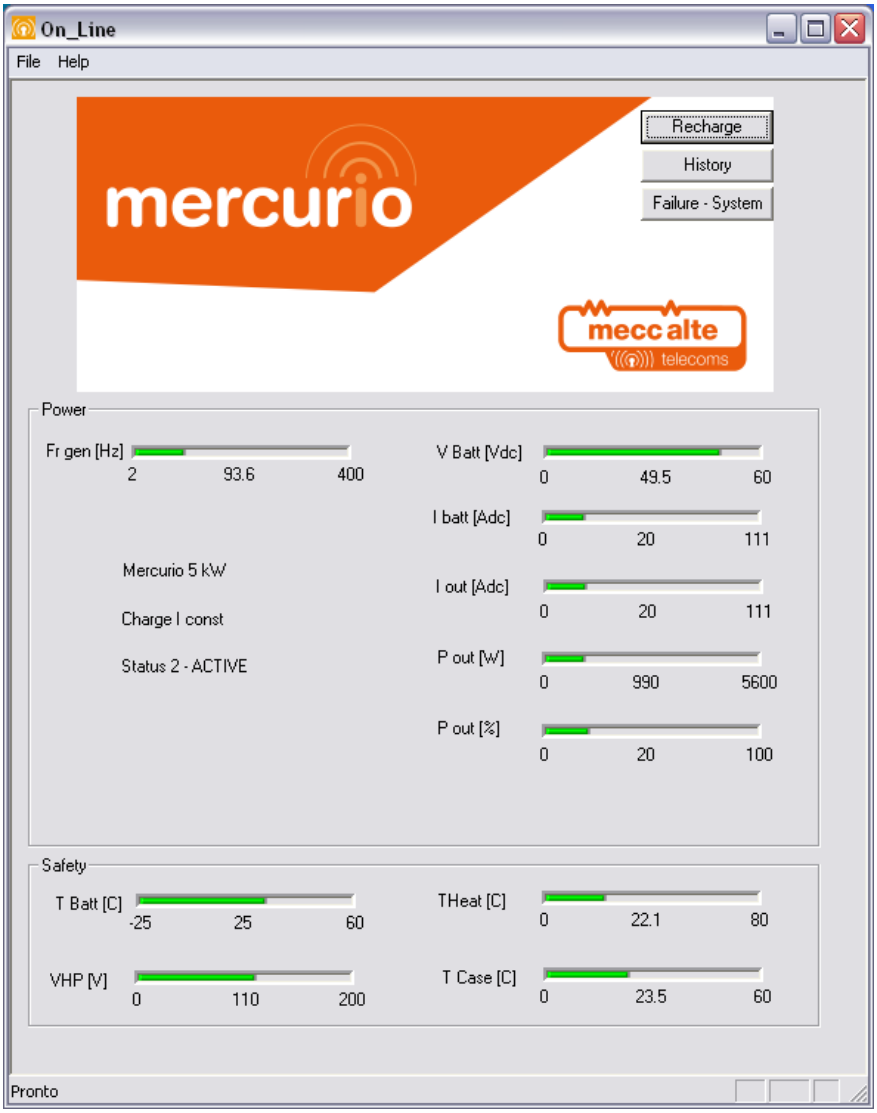

Figure 16: Main page software Mercurio.

The main initial screen page will have the buttons that allow you to change the setting parameters.

Button	Description
Recharge	Starts a charge cycle
History	Records the time of operation
Failure—System	Records the errors that occurred

On the main page you can see all the electrical parameters, and also the state of the machine.

Parameter	Description
Fr Gen	Input frequency detect
Mercurio XXkW	Indicates the size of Mercurio
Discharge	Indicates state of charge (Discharge, Icost, Vcost, Maintenance)
Status	Operation of the Mercurio (see 4)
Vbatt	Battery voltage in Volt
Ibatt	Current Battery in Ampere
Iout	Output current in Ampere
Pout [W]	Output Power in Watt
Pout [%]	Output power in % (nominal power)
Tbatt	Battery Temperature in °C
VHP	Input rectifier voltage in V
Theat	Heatsink temperature °C
Tcase	Internal temperature °C

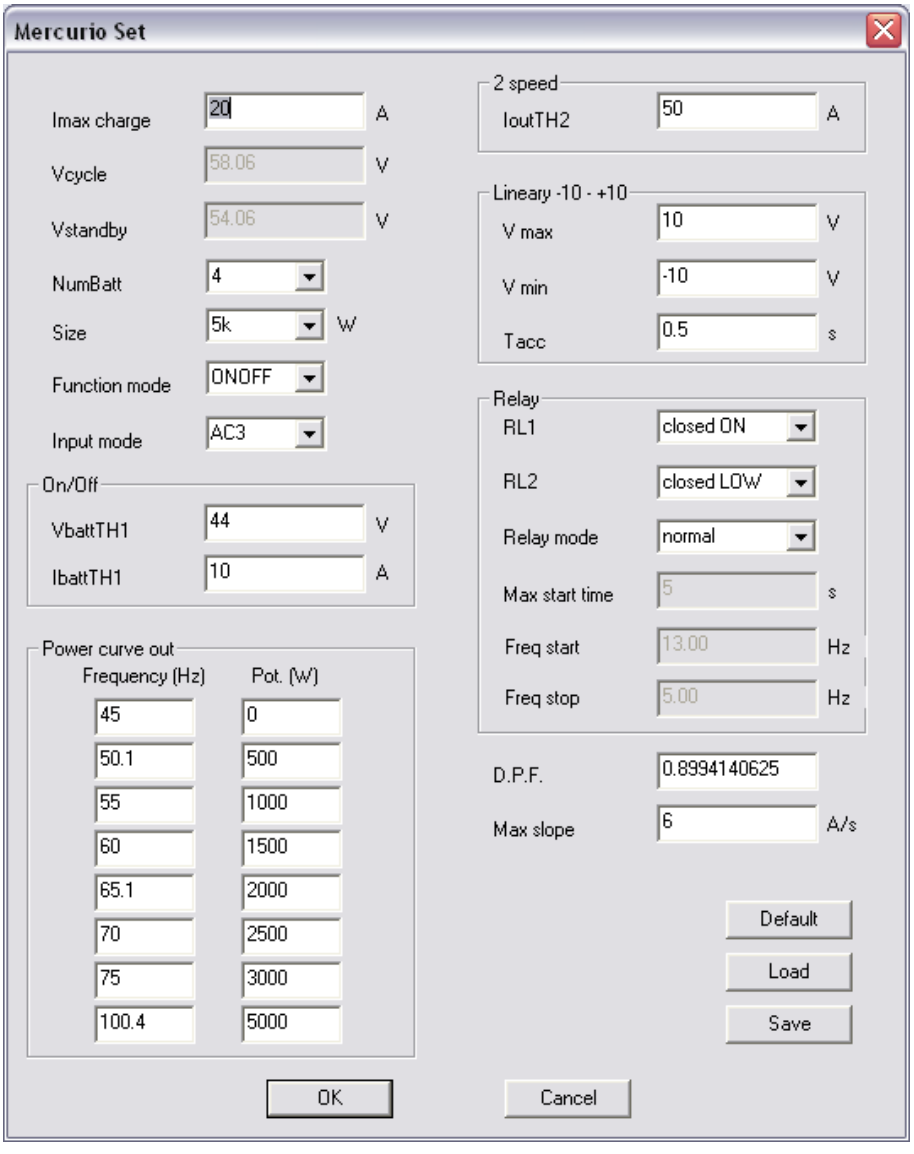

Figure 17: Page setup parameters.

12.3 History and failure counter

The software provides timing information in the life of Mercurio with the History of the errors had.

To read the History:

1. Select the button “Failure—System”

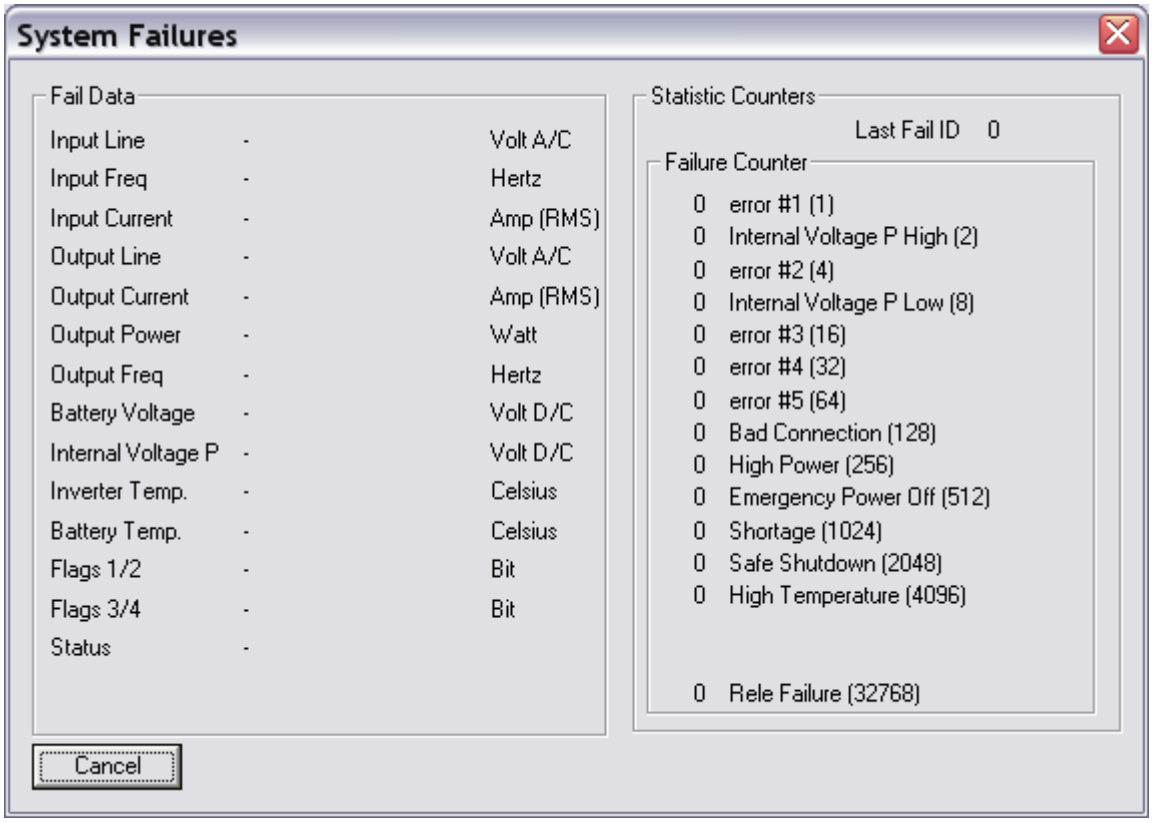

To read the fault system:

1. Select the menu “Help”
2. Select “Firmware version”



To read the fault battery:

1. Select the menu “User”
2. Select “History”

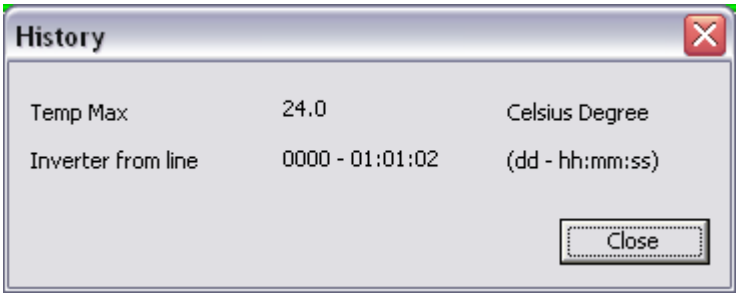

12.4 Advanced control parameters

Through this operation you can access more sensitive parameters of Mercurio, to be performed only by an competent authorised person. May cause irreversibly damage to of Mercurio.

To read the CorrAd:

1. Select the menu “User”
2. Select “Corr AD”

These parameters are highly sensitive, because they go to directly modify the readings of electric quantities of Mercurio. And are exclusively to enable the calibration (offset and amplitute) of the electrical quantities.

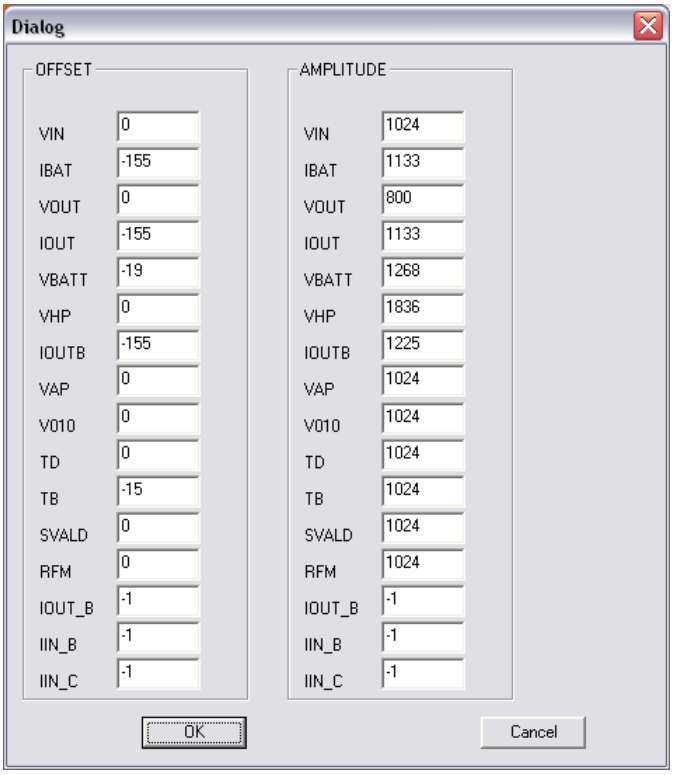

To read the Parameters:

1. Select the menu “User”
2. Select “Parameters”

Parameters used exclusively for debugging. Normally these parameters must remain unchanged.

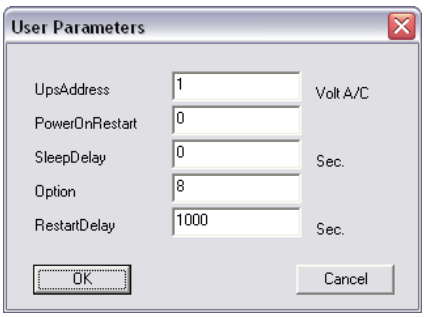

12.5 Parameter description

In this section we describe the parameters of the Mercurio. These parameters are important for correct operation of the Mercurio, the wrong setting can cause system malfunctions and/or even damage to the Mercurio.

12.5.1 Imax charge

This parameter sets the maximum charging current of the connected battery, for charging at constant current.

	Min	Max	Default	
5k	15	100	50	A
10k	30	200	100	A
15k	45	300	150	A

The battery manufacturer[8] recommends the charging current cannot pass the suggested limit of 0.25C during the initial charge phase. But to ensure a long life of the batteries suggest 0.1/0.2C.

For example with batteries 200Ah the maximum charging current must be 20A/40A

$$I_{\max charge} = 15\% Capacity[Ah]$$

12.5.2 Vcycle

The main stages of battery recharging (Icost Vcost & maintenance); voltage at which the batteries are brought in the constant current phase, and then maintained, constant voltage, until the current falls below the threshold.
Parameters are defined by the manufacturer and are strongly temperature dependent.

Temp 25 °C	Vcycle				
	2	3	4	5	#Battery
	29,03	43,55	58,06	72,58	V

12.5.3 Vstandby

This is the 'trickle' or maintenance part of the charge cycle; the voltage to keep the battery after a full charge cycle.
Parameters are defined by the manufacturer and are strongly temperature dependent.

Temp 25 °C	Vstandby				
	2	3	4	5	#Battery
	27,03	40,55	54,06	67,58	V

NOTE[8] for lead-acid batteries.

12.5.4 Size

Mercurio is available in three different sizes, and are selected by this parameter.

Size	Mercurio Power
5k	5000 W
10k	10000 W
15k	15000 W

12.5.5 Function mode

This parameter is used to select the operating mode of Mercurio.

Mode	Description
ONOFF	Most simply function
2SPEED	Mode for engines with two operating speeds
VARIABLE	Mode for engines with controllable variation of speed

12.5.6 Input mode

Through this parameter you can select the type of electrical input of Mercurio.

	Description
AC3	Three-phase system
AC1[9] (DC1)	Single-phase system
DC1 (AC1)	Direct current
AC3DC	Combined three-phase system and direct current (photovoltaic)
AC1DC	Combined single-phase system and direct current (photovoltaic)

Note that not all inputs allow all modes of operation

NOTE[9] Auto detect AC or DC.

12.5.7 VbattTH1

Adjustable voltage which you want to start charging the batteries, very sensitive parameter, because it affects heavily the battery life.

# Battery	Min	Max	Default	
2	21	25	22	V
3	31,5	37.5	33	V
4	42	50	44	V
5	52,5	62,5	55	V

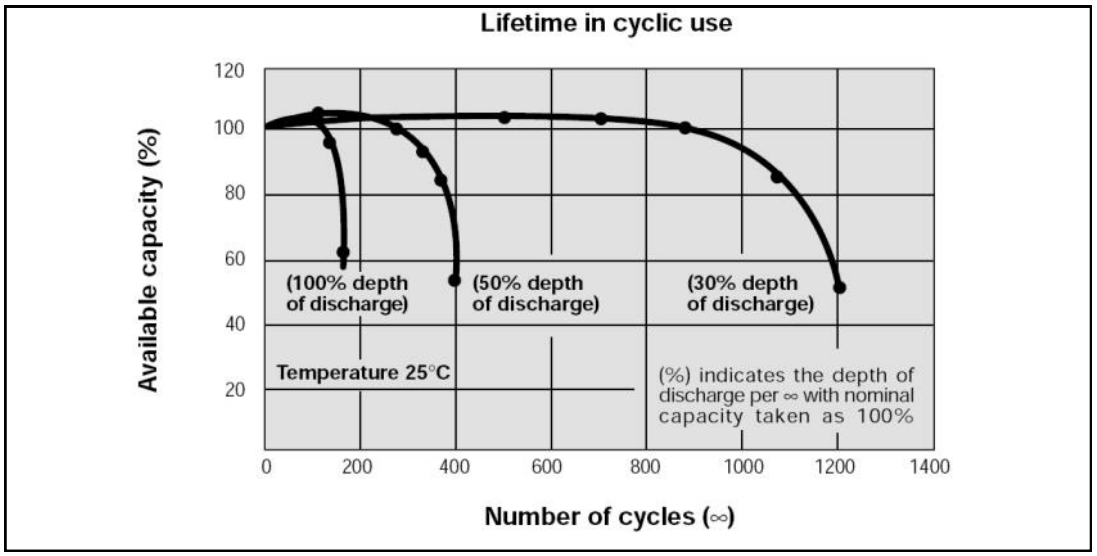

Figure 18: Depth of discharge (DOD) versus number of cycles[10].

It can be seen in the Figure 18[11], the higher the value of discharge the shorter the battery life.

12.5.8 IbattTH1

Adjustable current at which point you want to stop charging the batteries, valid for all operating modes.

Size	Min	Max	Default	
5k	5	10	5	A
10k	10	20	10	A
15k	15	30	15	A

The manufacturer recommends the charging current begins to decrease until it reaches a level of minimum charging current, also known as maintenance current which generally equals at:

$$I_{battTH1} = 0.03\frac{A}{Ah}$$

For example with batteries 200Ah the current must be 6A

NOTE[10] For lead-acid battery.
NOTE[11] Image taken from the documentation of the FIAMM.

12.5.9 IoutTH2

In dual speed mode this is the current threshold that discriminates the change of speed.
Parameter to be calculated carefully considering the medium loads and the size of the batteries.

Size	Min	Max	Default	
5k	20	80	50	A
10k	40	160	100	A
15k	60	240	150	A

12.5.10 Vmax & Vmin

Through this parameter, you can limit the dynamics of the signal that controls the engine acceleration mode for variable speed operation

	Min	Max	
Vmax	-10	10	V
Vmin	-10	10	V

12.5.11 Tacc

This parameter controls the speed of response of the analogue signal to the engine.
A low value speeds up the tracking of the engine with respect to changes of the load, on the contrary a high one is slower but guarantees a greater stability of the system.

	Min	Max	Default	
Tacc	0.3	10	0.5	S

12.5.12 Relay Mode

The relays have the possibility to implement two types of operation:

- Normal, simplest mode that maintains a logical level for the actuations
- Mechanical, real mode in which simulates mechanical actuation

It is also possible also choose the polarity of the relay, both software and physical levels.

Care must be taken to correctly set the polarity, because if wrong it could cause unexpected commands.

	RL1	RL2
Normal	ON/OFF	HIGH/LOW 2SPEED
Mechanical	ON	OFF

In the above case the DC can be related to PV photovoltaic input.

Note that not all of the operation modes are available with ‘mechanical’ mode, as reported in Table 15

Function Mode	Normal	Mechanical
ONOFF	√	√
2SPEED	√	×
VARIABLE	√	√

Table 15: Relay Mode vs. OpertionOperation Mode.

12.5.13 Max start time (delay5)

Active only with mechanical mode.
Maximum time for which the signal is kept active.

	Min	Max	Default	
Max start time	2	15	5	s

12.5.14 Freq start

Active only with mechanical mode.
Frequency in which it is considered the engine is running, at this frequency RL1 is disenabled, this is to prevent damage to the system trying to start the engine when the engine is already running.

	Min	Max	Default	
Freq start	10	25	13	Hz

12.5.15 Freq stop

Active only with mechanical mode.
Frequency at which you consider the engine off and you can inhibit the activation of the RL2.

	Min	Max	Default	
Freq stop	2.5	10	5	Hz

12.5.16 D.P.F.

Coefficient which considers the impedance of the alternator and can not exceed the maximum input current.

	Min	Max	Default
D.P.F.	0.25	1	0.8

It must be guaranteed that the input of the Mercurio is not at any time to exceed the value of 50 amperes (for each input phase).

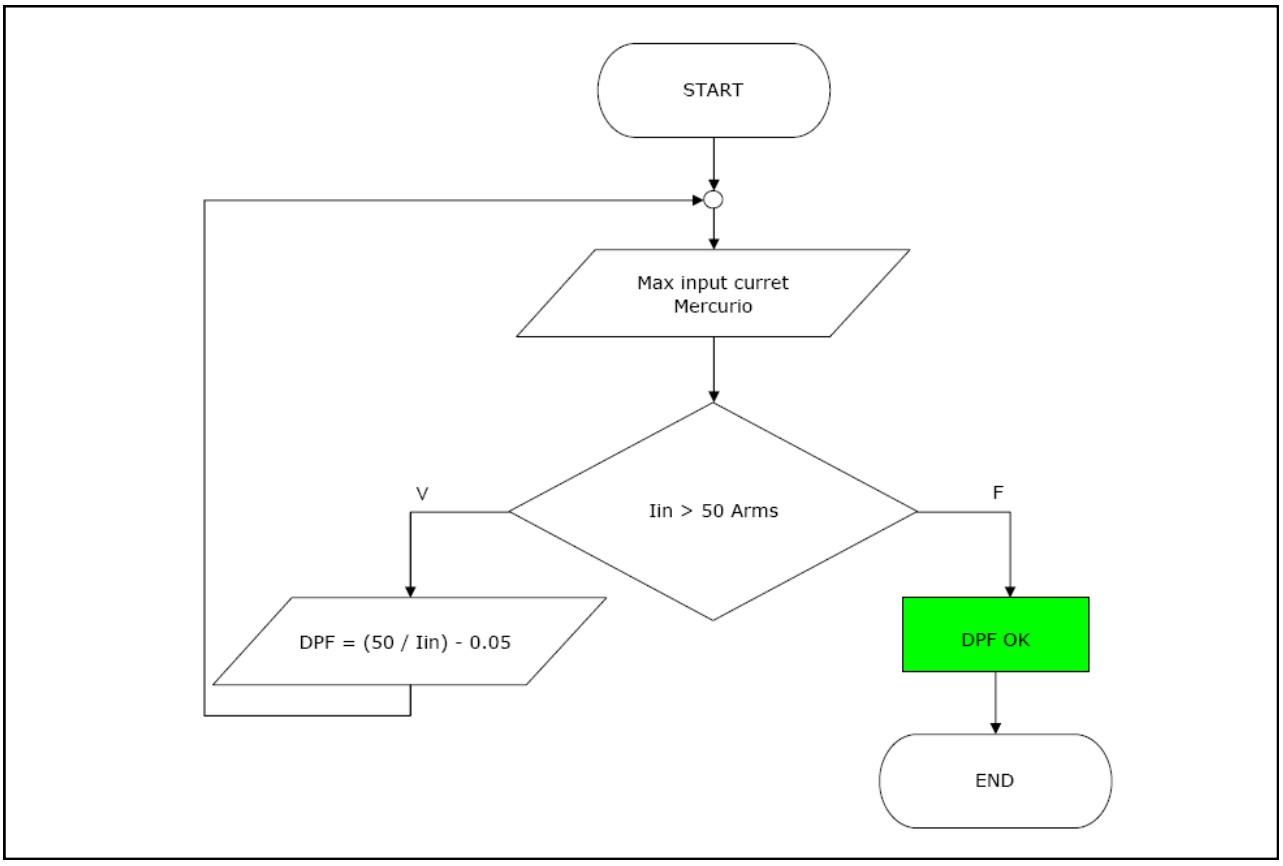

12.5.17 Max Slope

This parameter that defines the maximum slope of the output current. Can be set all the greater when the reactivity of the system (engine and generator) is fast.

	Min	Max	Default	
Slope	6.25	37.5	6.25	A/s

The parameter is observed in all the operating conditions, whereas is not respected only if there is some potentially damaging situation for the batteries and/or loads.

NAME	VALUE	DESCRIPTION
Imax charge	15 ÷ 100 A (5k) 30 ÷ 200 A (10k) 45 ÷ 300 A (15k)	Maximum current of battery chargers
Vcycle[12]		Voltage range deep charge (for element)
Vstandby[13]		Voltage range maintenance (trickle) phase (for element)
NumBatt	2 ÷ 5	Number of battery
Size	5kW - 10kW - 15kW	Size of Mercurio
Function Mode	ONOFF 2SPEED VARIABLE	Operating mode of Mercurio
Input Mode	AC3 – AC1(DC1) – AC3DC – AC1DC	Type of input
VbattTH1	10.5 ÷ 12.5V	Start voltage charge (for element)
IbattTH1	5 ÷ 10 A (5k) 10 ÷ 20 A (10k) 15 ÷ 30 A (15k)	Current cut off, the charging completed
IoutTH2	20 ÷ 80 A 40 ÷ 160 A 60 ÷ 240 A	Current threshold of dual speed
Vmax	-10 ÷ 10V	Maximum voltage mode variable
Vmax	-10 ÷ 10V	Minumun voltage mode variable
Tacc (delay3)	0.3 ÷ 10 s	delay tracking
RL1	Closed ON Closed OFF	Polarity relay 1
RL2	Closed High Closed Low	Polarity relay 2
RL3		
Relay mode	Normal Mechanical	Relay operation mode selection
Max start Time (delay5)	2 ÷ 15 s	Maximum time command is enabled (only mechanical mode)
Freq start	10 ÷ 25 Hz	Frequency threshold for considering the engine running
Freq stop	2.5 ÷ 10 Hz	Frequency threshold for considering the engine off
D.P.F.	0.25 ÷ 1	Displacement Power Factor
Max Slope	6.25 ÷ 37.5 A/s	Maximun slope output current
Curve of power out	8 point	Setting power curve

Table 16: Summary parameters.

NOTE[12] Function of temperature.
NOTE[13] Function of temperature.

12.6 Detailed curve - output power

One of the major characteristics of the Mercurio is that you can set the power curve.

It is the user's responsibility to prescribe the correct power curve that represents the entire system considering engine, alternator, altitude work, etc. Through the speed range the and in consideration of worst operating conditions (temperature/altitude etc), the power converter capability to be above the actual load, alternator above the converter load and engine above the alternator capability. Mecc Alte can provide guidance on this matter if requested.

To insert of the power curve[14] you must enter specific power points within the eight points shown in the setting parameter page of the software.

The power curve that can be set via dedicated software, has to represent the distribution of the power output as a function of the input frequency to "Mercurio" system.

This setting does not depend on the operating mode (ONOFF, 2SPEED and VARIABLE).

The "Mercurio" will faithfully follow the curve set independently of the operating mode selection, delivering the power corresponding to the frequency read on its input.

Notes regarding the setting of the power curve :

Frequency : the sequence of the inserted data must always be increasing (monotonous) and different from zero.

Power : it is accepted any value except non-negative

All fields must be filled.

As an example you can see below points and then corresponding calculated curve (Table 17 and Figure 19).

Point	Frequency[15] [Hz]	Power Out [W]
1	29	0
2	30	50
3	33	2.825
4	33,3	2.875
5	43,3	4.375
6	49	4.906
7	50	5.000
8	60	5.000

NOTE: For variable speed operation all 8 points must be populated with ascending Hz & W from 1 to 8. The maximum power and frequency for the selected system (dependent on engine speed/power curve and frequency with the number of pole of the selected alternator), must always be at point 8 and the progressively less Hz/W in point 7 downwards to suit the engine/ alternator/Mercurio/load system.

Table 17: Example of points selected.

NOTE[14] For all operating modes all the points (frequency and power) must be populated
NOTE[15] Ever increasing

Mercurio will take care to follow the inserted points, linear interpretation in the intervals.

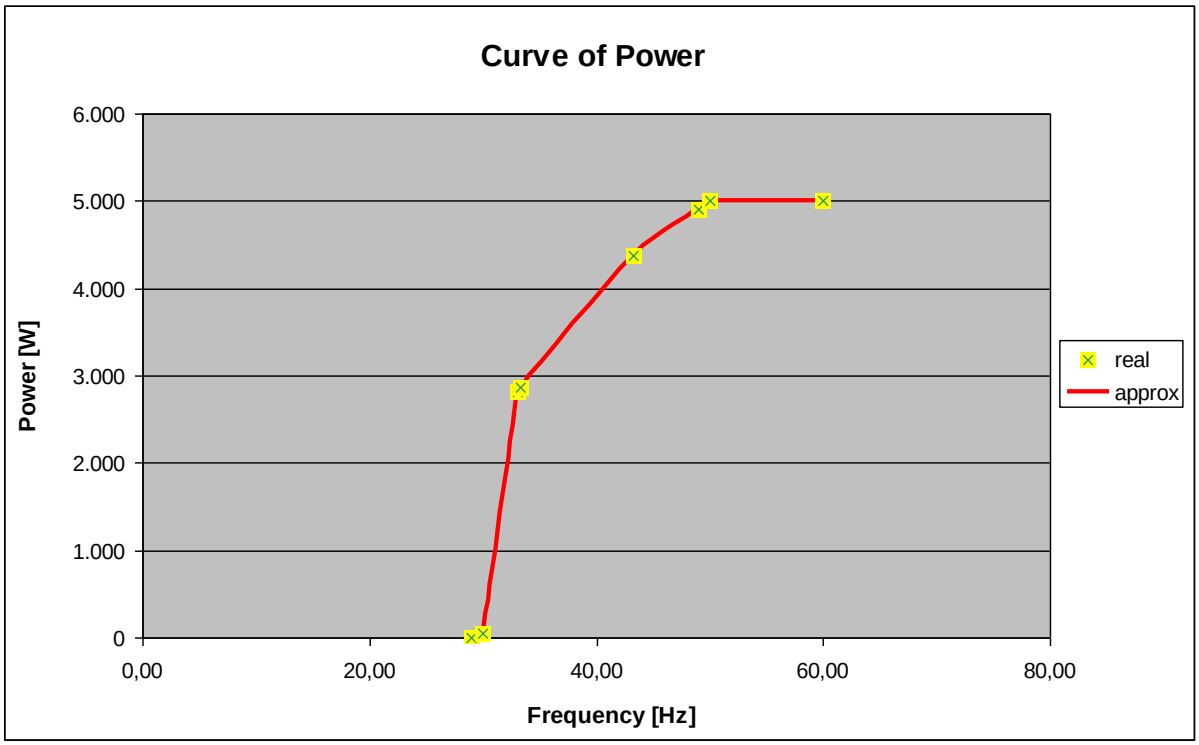

Figure 19: Resulting curve.

1) **Single speed (ONOFF)**

The curve is correct if at steady state the input frequency is greater than or equal to 50 Hz; then Mercurio will provide all 5 kW available.

2) **Dual speed**

Choosing two working points suitably it will correspond two working points of the described curve. For example LOW (35Hz) at about 3kW and >=50Hz for HIGH at full power.

3) **Variable**

The linear signal is not directly connected to the power curve but it adapts to search for the necessary power to support the system (loads + batteries).

In this mode, if the input frequency is greater than the last value entered in the table 17, then the system will not accelerate.

The curve is followed in its trend varying the Mercurio load.

NOTE(15) Ever increasing

13 OPTIONAL

The machine various many options, are:

- Many different interface
- Input DC from photovoltaic or wind
- Display LCD for monitoring

13.1 Interface USB

Adding an external interface is also possible to have the Interface USB communication.

13.2 Interface RS485

Adding an external interface is also possible to have the Interface RS485 communication.

13.3 Interface ModBus

Optional adapter with firmware / software and adding an external interface is also possible to have the interface ModBus communication.

13.4 Interface Ethernet

Optional adapter with firmware / software and adding an external interface is also possible to have the interface Ethernet communication.

13.6 Display

The reporting of the operational state of the Battery Charge is provided by:

- eight warning lights (LED)
- a liquid crystal display LCD (16x2)
- an audible warning device
- four buttons for power, shutdown, consultation display and system customization

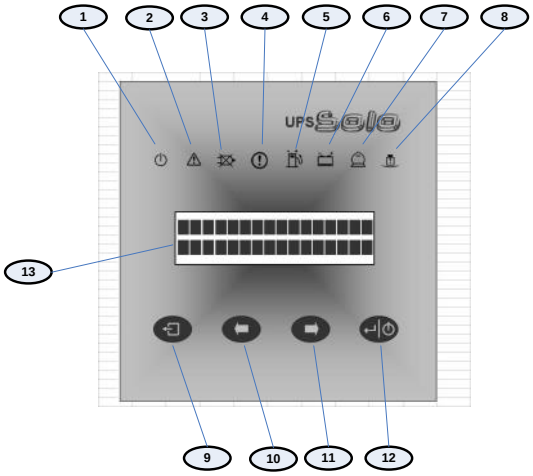

1	LED0	ON	System active
2	LED1	ON	Engine enable
		OFF	Engine disable
3	LED2	ON	High speed
		OFF	Low speed
4	LED3	ON	Linear ±10V
		OFF	On/Off o 2Speed
5	LED4	ON	CHARGE Constant current charging
		OFF	Discharge
		Blink	MAINTENANCE Charge constant voltage
6	LED5	ON	Battery Low
		OFF	Battery OK
7	LED6	-	Not used
8	LED7	-	Not used
9	ESCAPE		
10	LEFT		
11	RIGHT		
12	ENTER		

14 ENCLOSURE

14.1 Mercurio 5k

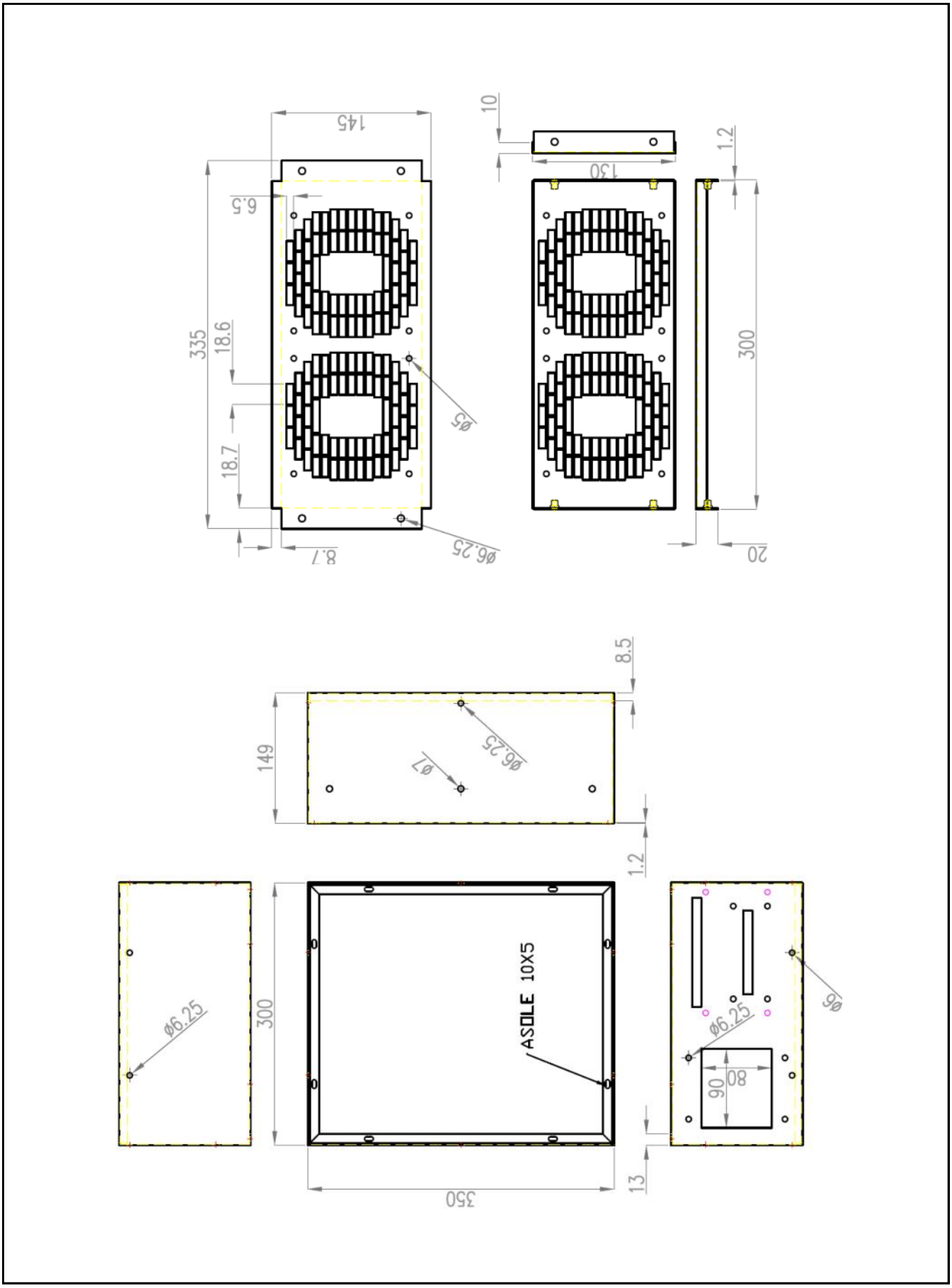

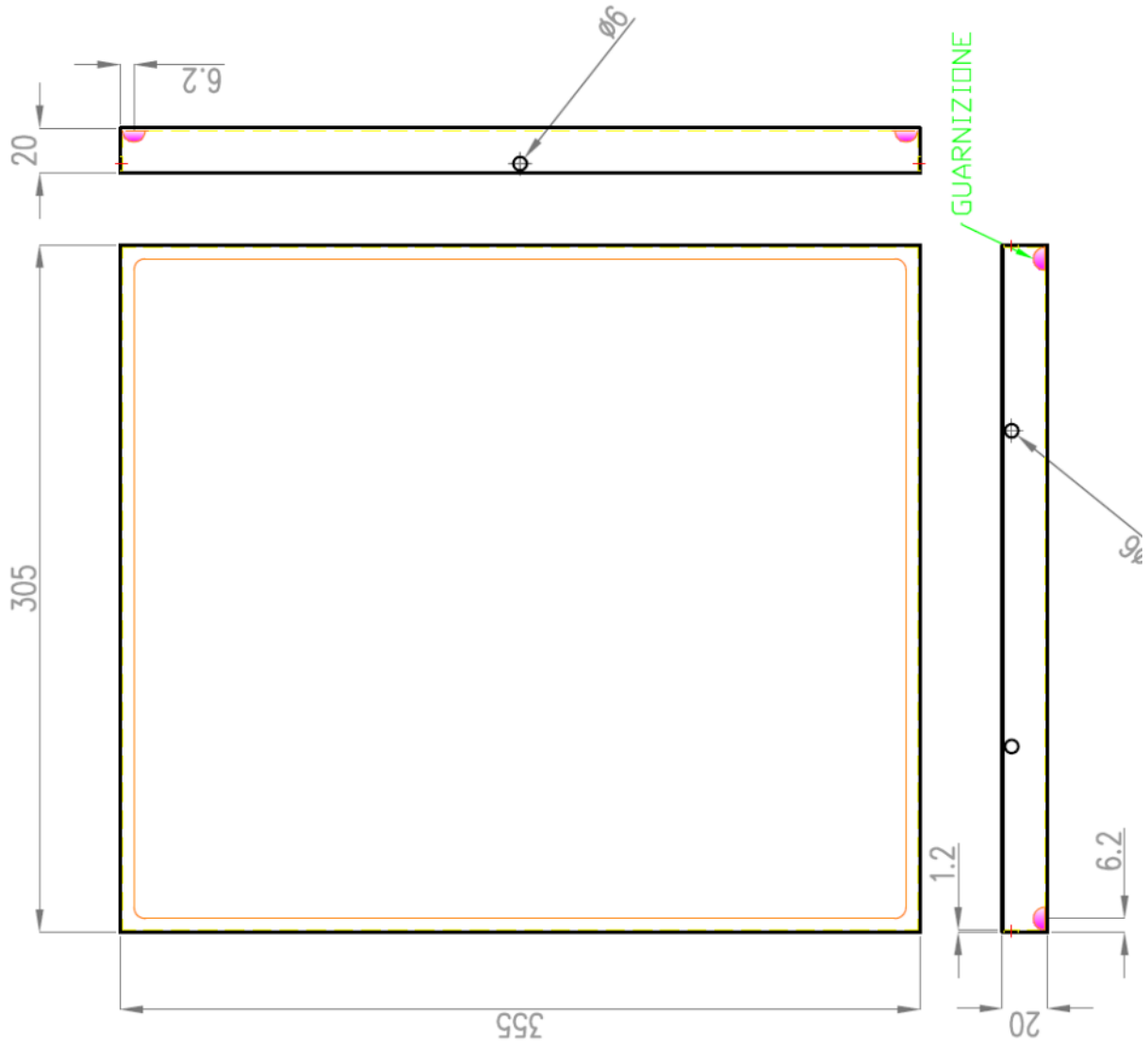
6.2
ø6
20
GUARNIZIONE
305
ø6
1.2
6.2
355
20

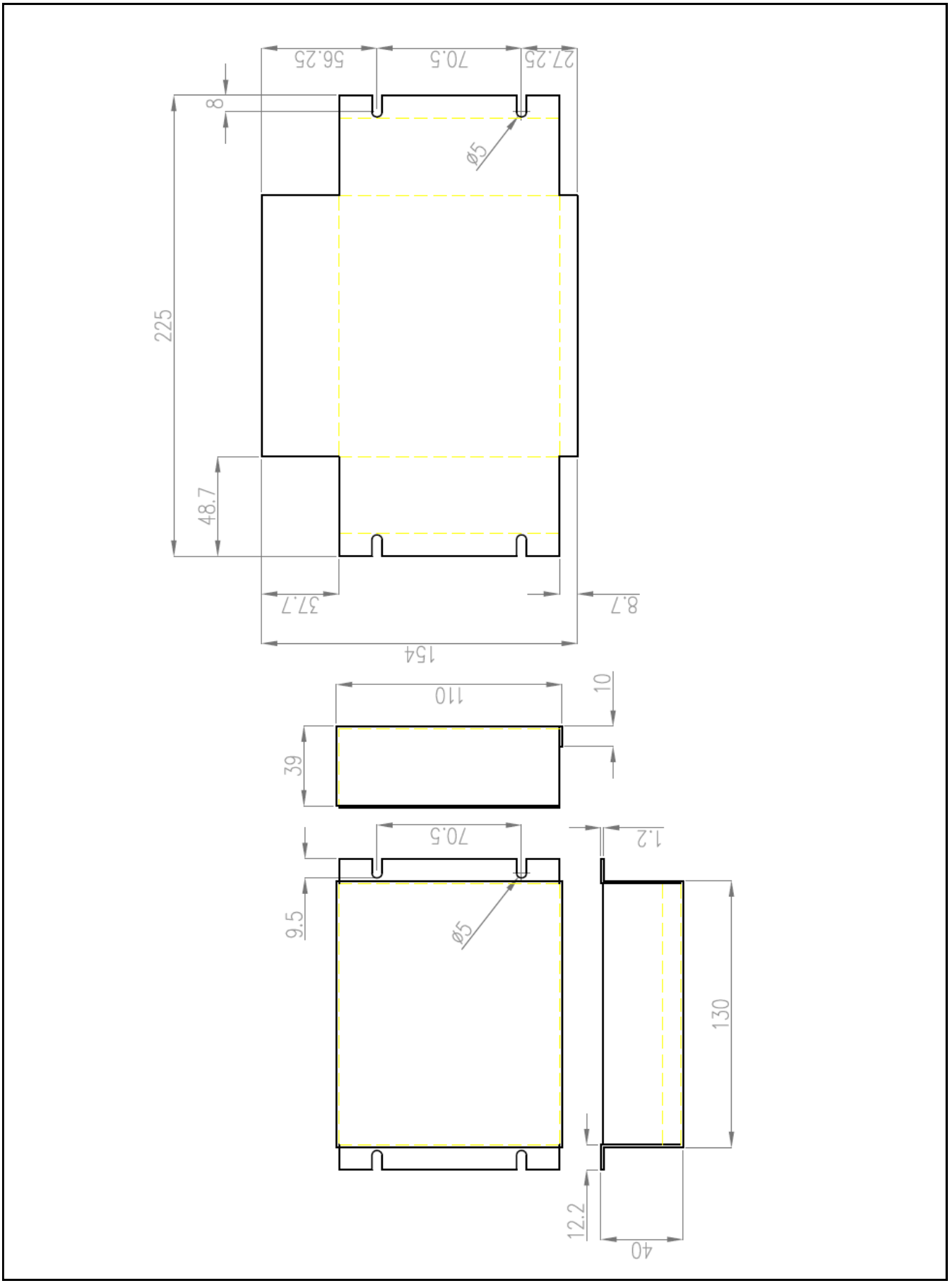
56.25
70.5
27.25
8
Ø5
225
48.7
37.7
8.7
154
110
10
39
70.5
1.2
9.5
Ø5
130
12.2
40

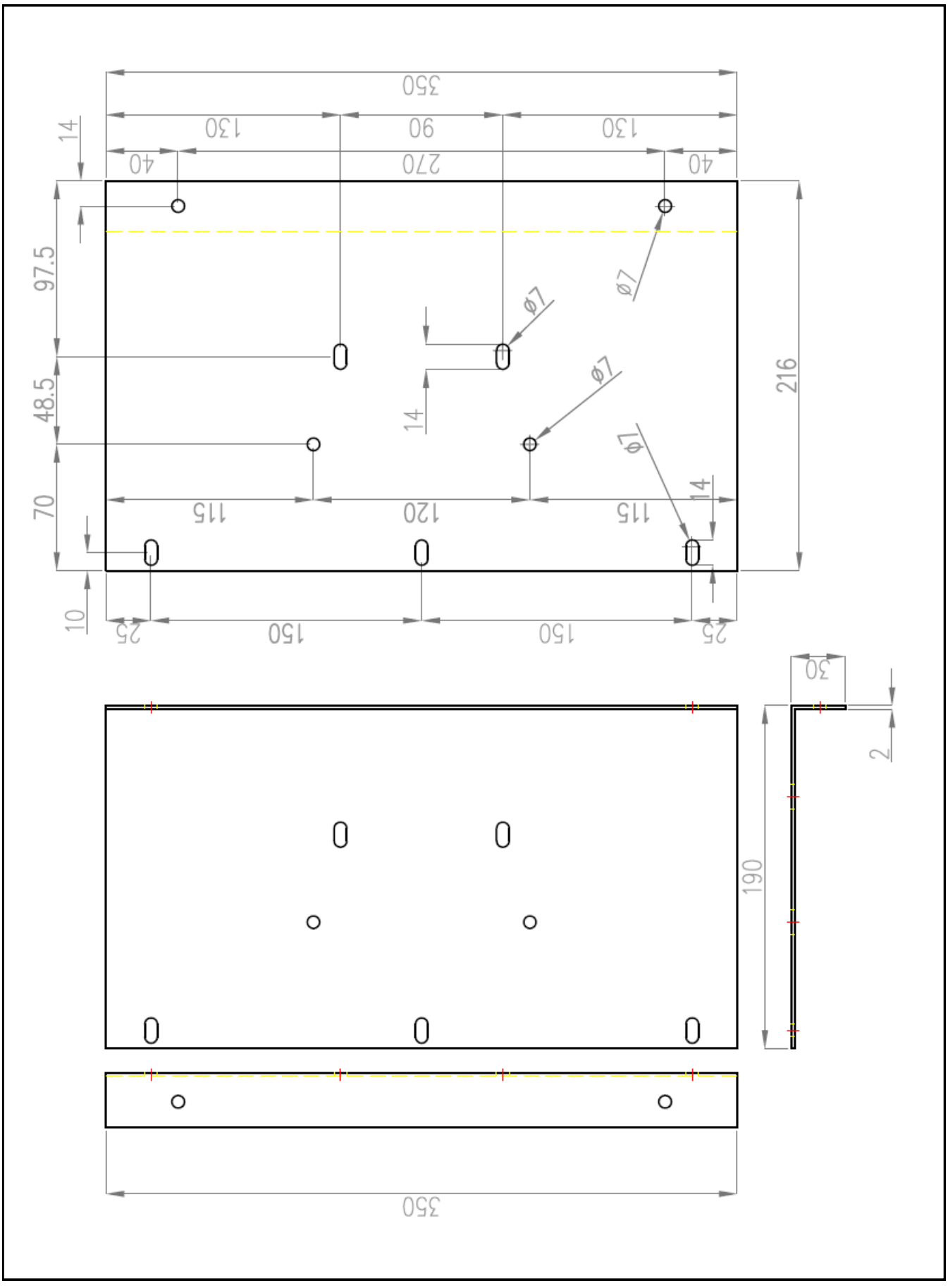
350
130
90
130
14
40
270
40
97.5
48.5
70
216
ø7
ø7
ø7
ø7
14
14
115
120
115
10
25
150
150
25
30
2
190
350

14.2 Mercurio 10k

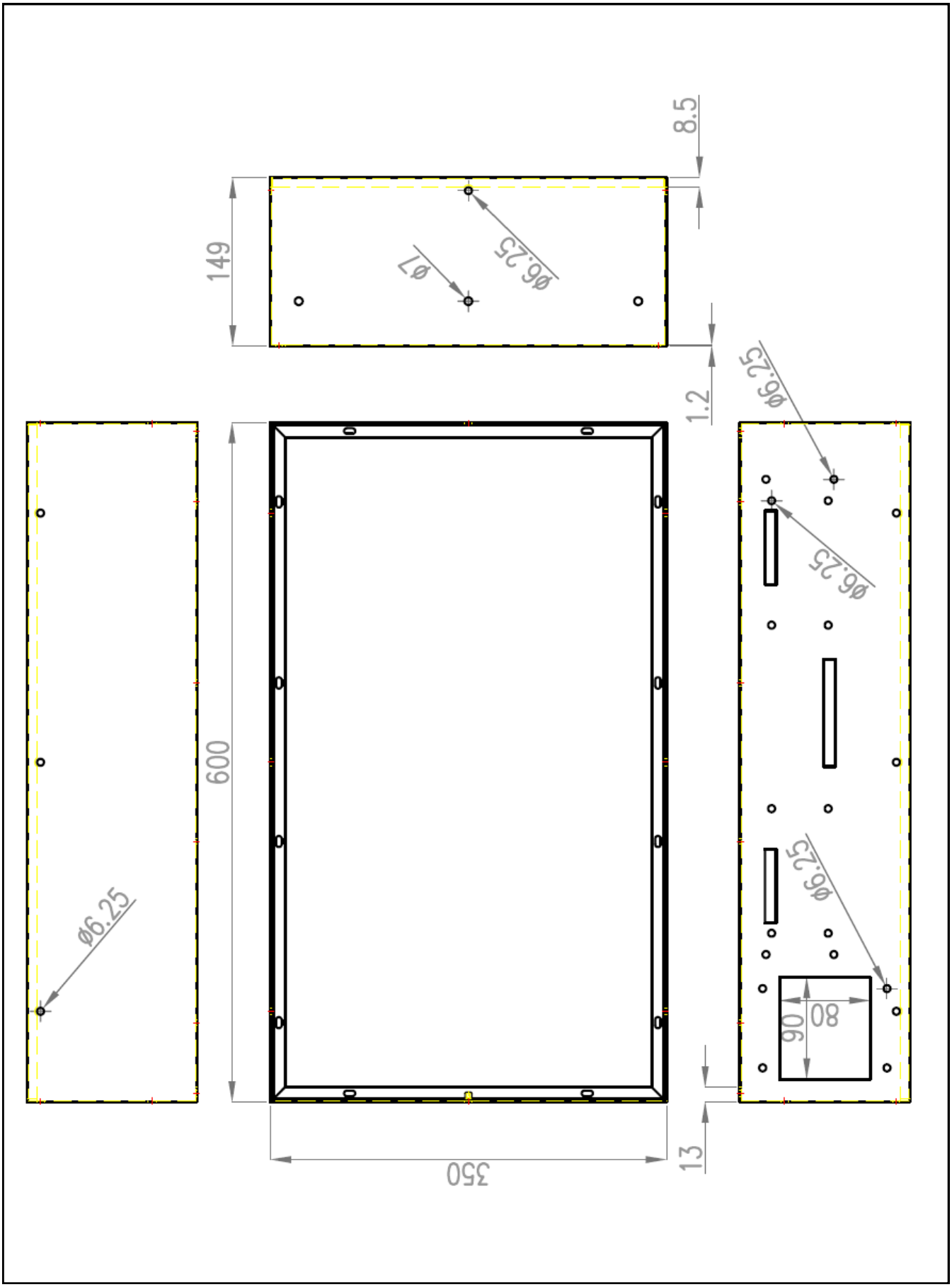

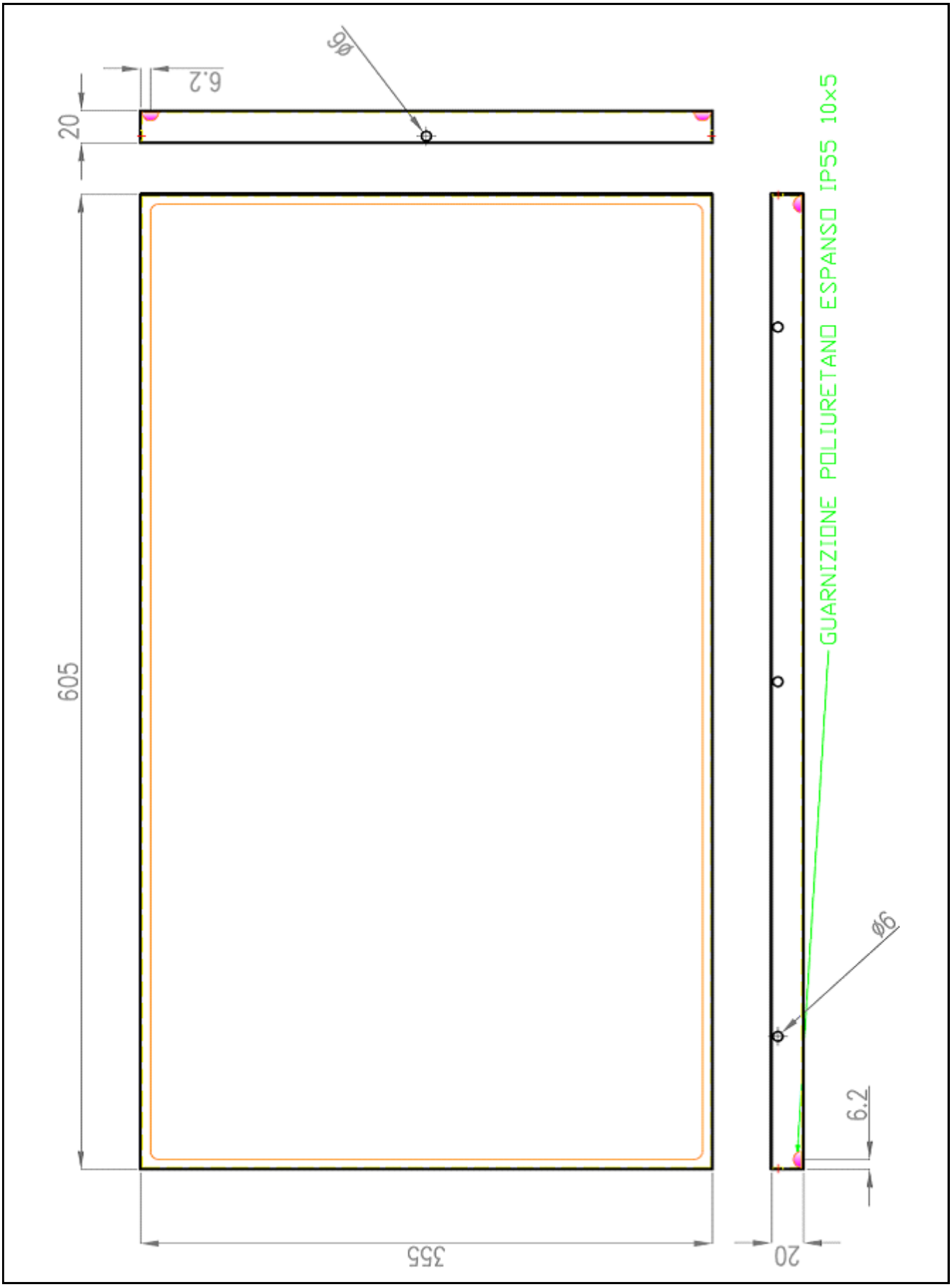
GUARNIZIONE POLIURETANO ESPANSO IP55 10x5
6.2
20
605
355
20
6.2

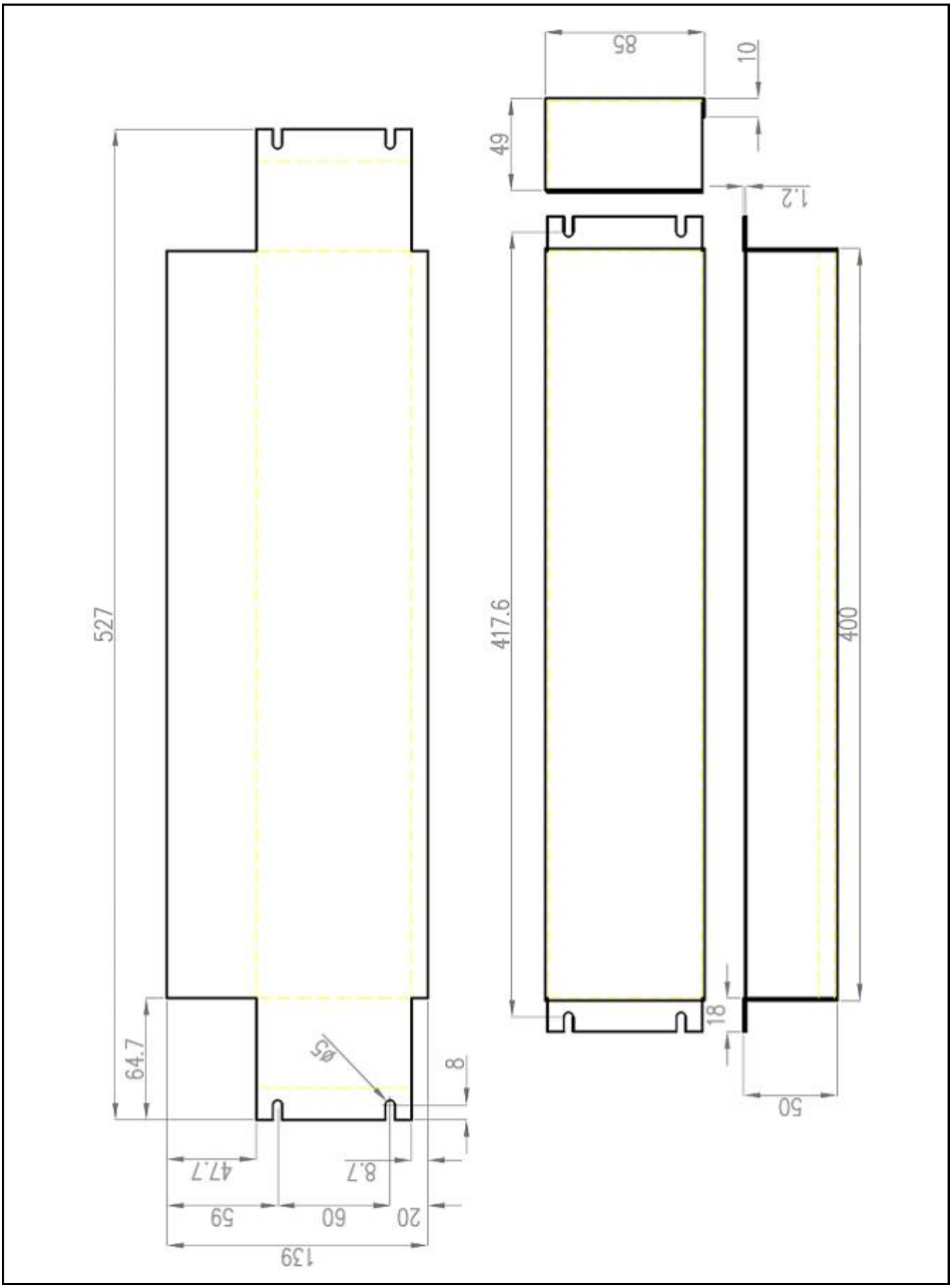
85
10
49
1.2
527
417.6
400
64.7
Ø5
8
18
50
47.7
8.7
59
60
20
139

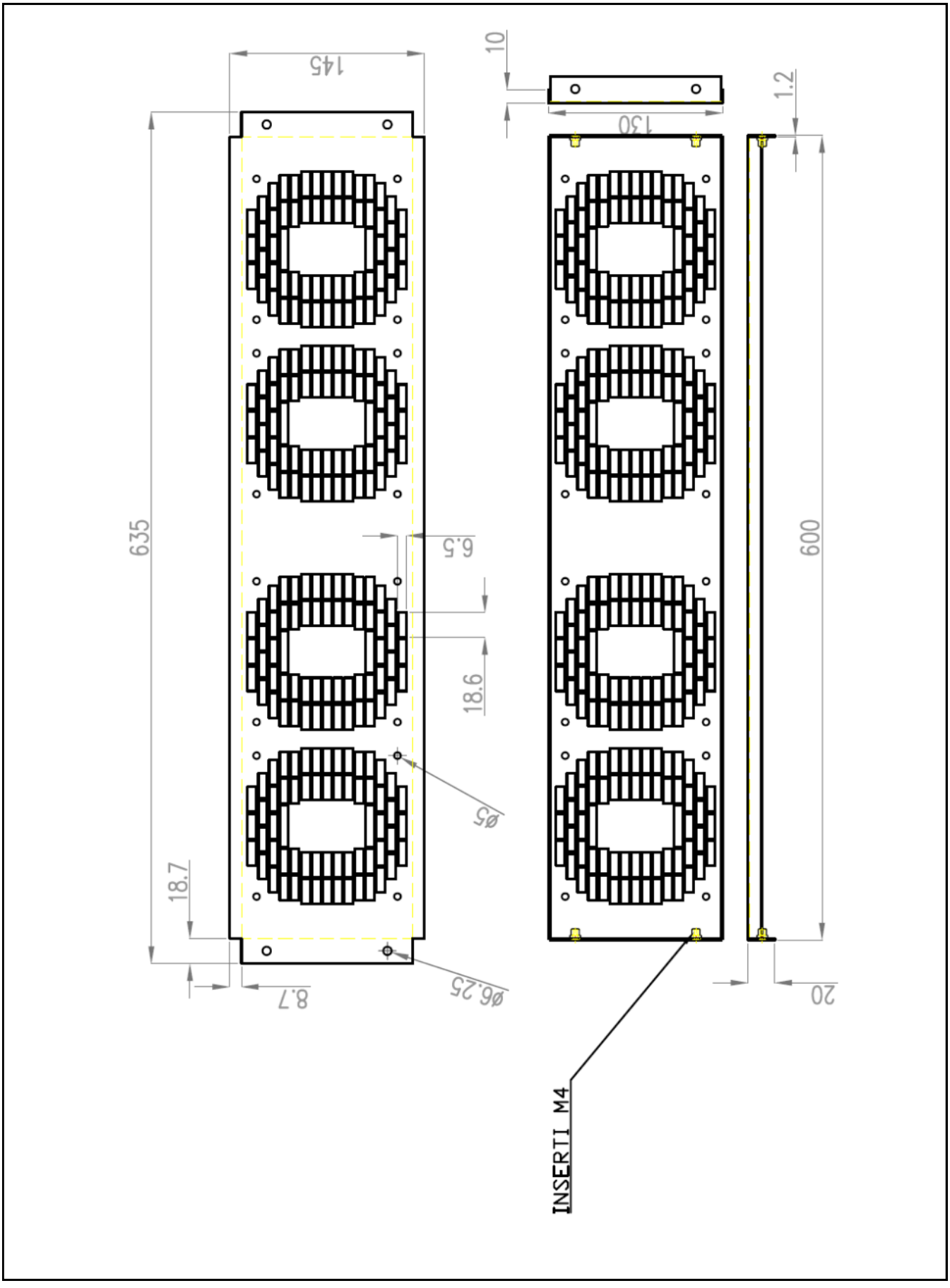
145
635
6.5
18.6
Ø5
18.7
8.7
Ø6.25
10
130
1.2
600
20
INSERTI M4

14.3 Mercurio 15k

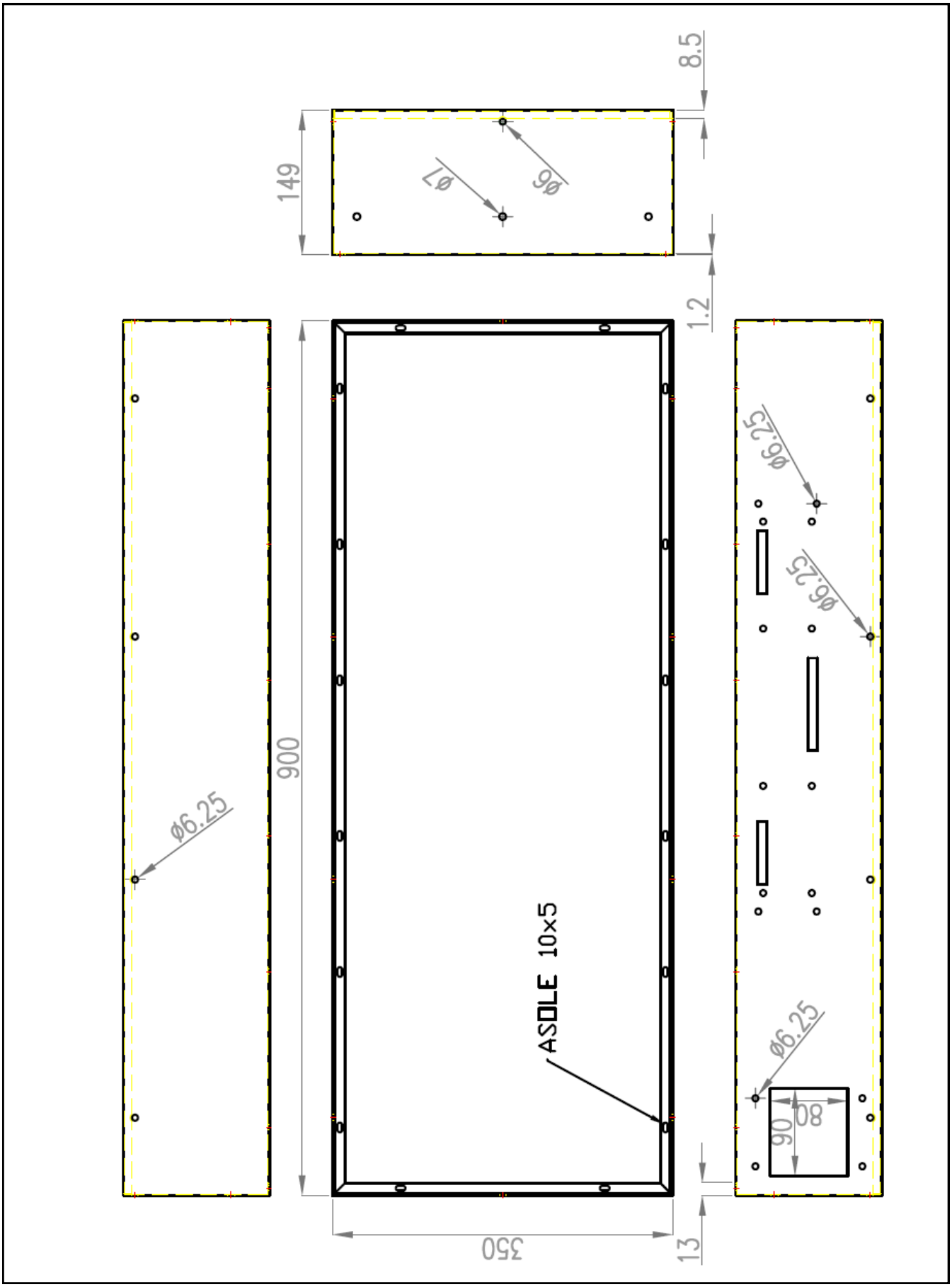

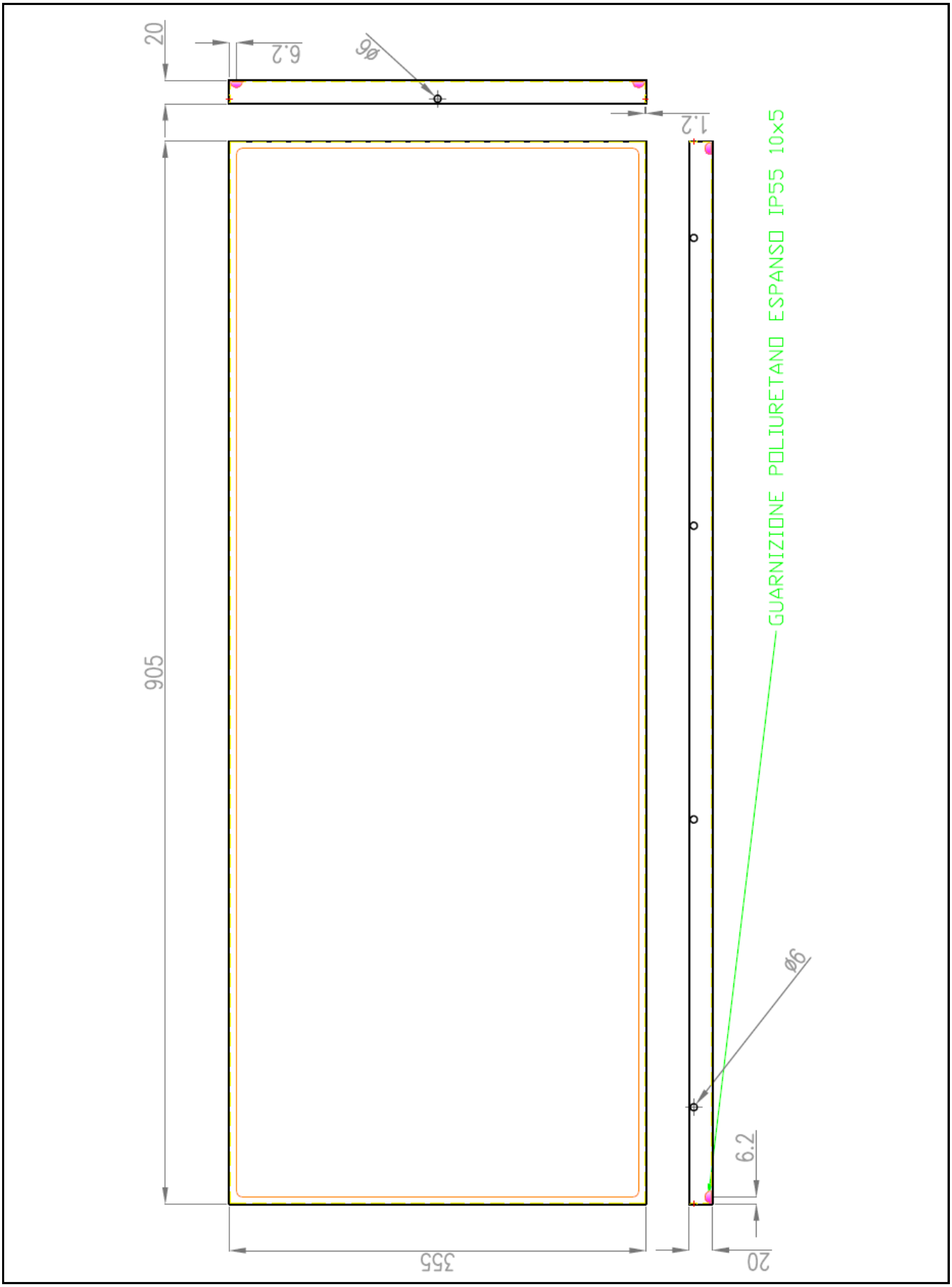
20
6.2
ø6
1.2
GUARNIZIONE POLIURETANO ESPANSO IP55 10x5
905
ø6
6.2
355
20

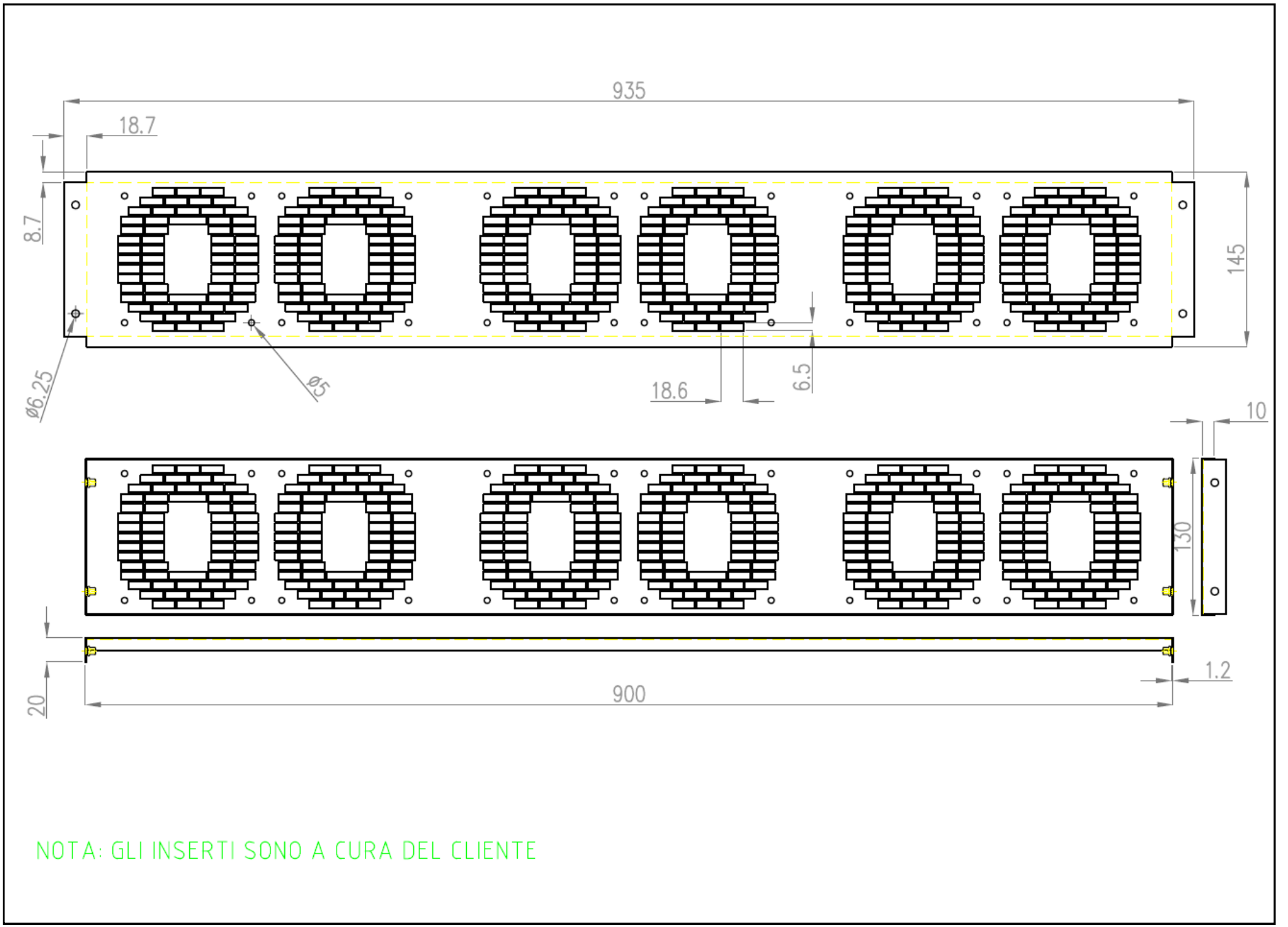

NOTA: GLI INSERTI SONO A CURA DEL CLIENTE

15 CERTIFICATION

Available soon.

16 ORDINARY SERVICE

Use a soft and dry cloth to clean the front panel and the plastic part. Do not use any alcohol liquid and do not spray any liquid inside the unit.

The normal working life of the battery is 3/4 years: a wrong use could reduce its life.
Disconnect the Mercurio if it is stopped for long time.
Change the battery with ones of the same type.

In case of call to the Service Centre, this information will be asked:

1. Model of the unit and serial number.
2. Purchase date.
3. Detailed description of the problem.

Technical Service
In case of any suspicious behaviour of the unit contact the Mecc Alte Service Centre.

The producer is not responsible in case of not allowed modifies on the unit made by the client or not authorised third party.
To have information about the nearest Service Centre contact.

Mecc Alte S.p.A. via Roma, 20
36051 Creazzo (VI).
Tel +39 0444 396111, Fax +39 0444 396166
email info@meccalte.it - aftersales@meccalte.it

16.1 Disposal informations

The metal parts of the cabinet, both the varnished ones and the stainless steel ones, are regularly recovered by companies specialised in the scrapping of metals

It is mandatory that Electronic cards have to be disposed of companies specialised in the disposal of electronic components.

The disposal of other parts making up the Mercurio, i.e. rubber, gaskets, plastic materials and wiring has to be assigned to companies specialised in the disposal of industrial materials.

APPENDIX A

BATTERY CHARGE MESSAGE STRUCTURE

FROM FIRMWARE VERSION 2.0.6

06/03/2014

1. Generalities

In order to connect different charger Mercurio (up to a maximum of 31) using a single serial line RS-485, has been implemented a communication protocol appropriate.

This protocol, which is compatible with the situation of a single equipment connected with RS-232 line, provides that each charger is identified by a code (or address) from 0 to 31.

Distinction between address and data/other byte:

- Byte address starts with “0”
- Byte command starts with “1”

Generic command sent to a charger:

```
|   BYTE   ADDRESS   |     BYTE COMMAND     |
|1|x|x|C5|C4|C3|C2|C1|0|R7|R6|R5|R4|R3|R2|R1|
```

A response packet:

```
| ADDRESS-128 | BYTE COMMAND | HEX DATA | CHECKSUM HI | CHECKSUM LO |
```

"HEX DATA": group of bytes of response to the command (represented hexadecimal). It is not necessary to know the number of bytes of the field "HEX DATA", because the number is known to the control unit that requires the command.

"CHECKSUM HI" e "CHECKSUM LO": sum of all previous bytes.

The code-address is stored in the EEPROM microcontroller present in the charger, and it is preset to "1" during production and can be changed later via software with an appropriate command.

However, it was established that all the equipment, regardless of the identifier selected, respond to commands which begin at address 0.

This document also describes some of the functionality of the charger Mercurio (RS232):

- command a charge cycle
- the interruption of the charge
- characteristic parameters of Mercurio
- electrical values measured
- state of Mercurio

Each battery charge, after connecting the battery, the control board has power. In this situation, the charger is able to communicate through the RS232 communication port and then to respond to various commands even when it is not providing power.

We can identify two were typical for the charger Mercurio:

STAND-BY
Waiting phase of the conditions appropriate for the activation of the charger

ON-LINE
Current status of the battery charger, comprising the 3 states of charge (Discharge, Charge Icost, Charge Vcost, Maintenance).

The charger will answer or not to a given command if the operation status will be compatible. For example, when you want to set new parameters to the charger, the machine will go into "STAND-BY" as such parameters must be stored in EEPROM, an operation that executes only when the firmware is not dedicated to the generation of output.

The charger can be placed in the "STAND-BY" using the STOP command.

A control program that manages the charger Mercurio must always, as first operation, to determine which type of group is connected. Therefore using the command RELEASE VERSION from which it obtains a string which produces the type of group is connected and its firmware version.

Some indications of the legend :

```
* A character in double quotation marks must be interpreted as the ASCII char-
acter it represents. Example: "1" = byte dec. 49

* The symbol CR = byte dec. 13

* The symbol SOH = byte dec. 1

* The symbol EOT = byte dec. 4

* The symbol "+" is not part of the bytes transmitted but only used as a sepa-
rator to highlight parts of the message.

* With the abbreviation M[m] means the message data received from the program
containing "m" bytes in response to a command.

* Therefore the indication M(1) indicates the first byte contained in M(), M(2)
the second, ecc.
The symbol HEXM(i) indicates the pair of bytes that are obtained by converting
the byte in hex M(i) whereas HEXM[n] indicates that the number "n" is the
length in bytes of the message M[m] after converting hexadecimal ( n = m * 2 ).

* With the symbol "X" indicates one or more bytes in the message is not cur-
rently used.

* With the symbol SQR(...)is defined as the square root of the expression in
brackets.

* With the symbol AND means the operation carried out on all the bits for the
two operands considered.
Ex. : (53 AND 30)=(00110101 AND 00011110)=20=00010100
```

Warning: the commands to be sent to the charger consist of one (or more) pairs of characters. In order for these commands are properly received is necessary that between one character and the next transmitted to the charger are separated by a time delay of at least 10 milliseconds.

The serial port of the control unit must be set to 9600 baud, 8 data bits, 1 stop bit, no parity.

2. Command RECHARGE

You can start a charge cycle

```
COMMAND   : ADDR + "M" + HEXM[6] + HEXTxChkSum[4] -> (12 Bytes)

M(1) = 0;
M(2) = 1;
M(3) = 2;

RETURN  : ADDR@ + "P"  (Ack)
```

3. Command STOP MERCURIO

You can stop charging the batteries by sending this command.



Warning: If conditions exist valid operating the Mercurio will go in the state ON-LINE.

```
COMMAND   : ADDR + "S" + HEXM[4] + HEXTxChkSum[4] -> (10 bytes)

M(1) = 0;
M(2) = 0;

RETURN  : ADDR@ + "P"  (Ack)
```

4. Command IngVal

The data reported in this screen correspond to the electrical parameters measured in real time by group.

```
COMMAND   : ADDR + "3"  (2 bytes)

RETURN  : ADDR@ + CMD + HEXM[104] + HEXTxChkSum[4]

26 Short ==> 52 Bytes --> 2 + 104 + 4 = 110 bytes


CALCULATION DATA :


     LINE   (V)    =  M(1);M(2)              N.D.
     FREQ   (Hz)   =  M(3);M(4)              N.D.
     IBAT   (A)    =  ((M(5)+M(6)*28)
     VVENTN(V*8)   =  ((M(7)+M(8)*28)
     IOUT   (A)    =  ((M(9)+M(10)*28)
     POUT   (W)    =  (M(11)+M(12)*28)
     FREQ0  (Hz)   =  1/((M(13)+M(14)*28)*40*10-6)
     VBATT  (V*32) =  (M(15)+M(16)*28)
     VHP    (V)    =  (M(17)+M(18)*28)
     VHN    (V)    =  M(19);M(20)            N.D.
     KPFCP  ()     =  M(21);M(22)            Reserved
     KPFCN  ()     =  M(23);M(24)            Reserved
     INVT   (°C)   =  (M(25)+M(26)*28)/128
     CASET  (°C)   =  (30000-(M(27)+M(28)*28))/256
     FLAG12 ()     =  M(29);M(30)            Reserved
     FLAG34 ()     =  M(31);M(32)            Reserved
     STATUS ()     =  (M(33)+M(34)*28)
     REASON ()     =  (M(35)+M(36)*28)
     VALD   (V)    =  (M(37)+M(38)*28)
     TAGLIA (W)    =  (M(39)+M(40)*28)*5000
     NBATT  ()     =  (M(41)+M(42)*28)
     IMED   ()     =  M(43);M(44)            Reserved
     I1SEC  ()     =  M(45);M(46)            Reserved
     V010   ()     =  M(47);M(48)            Reserved
     POWER% (%)    =  (M(49)+M(50)*28)
     STATUSC()     =  (M(51)+M(52)*28)

     TxChkSum     = M(53)*28+M(54)

     * Check validity of data :

communication    --->   ADDR - 128 = ADDR@
                        CMD         = "3"
                        TxChkSum    = ADDR@+CMD+HEXM(1)+HEXM(2)+...+HEXM(52)
```

Legend:

VARIABLE	DESCRIPTION
Line	ND
Freq	ND
Ibat	Battery current
VventN	Voltage fan (negative, subtracting this voltage to the battery voltage is obtained by the voltage of the external fans)
Iout	Output current
PoutW	Output power
Freq0	Input frequency
Vbatt	Battery voltage
VphvP	Input voltage is rectified
VphvN	ND
KpfcP	ND
KpfcN	ND
InvTemp	Heatsink temperature
CaseTemp	Internal temperature
Flags12	Flags12 Mercurio (internal use)
Flags34	Flags34 Mercurio (internal use)
Status	State of Mercurio 3 standby 2 online
Reason	Id last fault 3 High VHP 5 Low VHP 14 Overtemp 15 Shortage 17 EPO
Tbatt	Battery temperature
Taglia	Mercurio size
BattNum	Number of batteries
Vth	Threshold voltage (internal use)
I1Sec	- (internal use)
IC	- (internal use)
v010in	- (internal use)
PowerPercent	Output power in % (nominal power)
StateCcb	Stato di carica delle batterie (scarica, icost, vcost e mantenimento) 0 Discharge 1 Charge Iconst 2 Charge Vconst 3 Maintenance

5. Command RELEASE VERSION

The firmware version on the battery charger can be displayed by this command

```
COMMAND   : ADDR + "V"  (2 bytes).

RETURN  : ADDR@ + CMD + HEXM[32] + HEXTxChkSum[4]

20 char ==> 40 Bytes --> 2 + 40 + 4 = 46 bytes


     * Check validity of data :

Communication    --->   ADDR - 128 = ADDR@
                        CMD        = "?"
                        TxChkSum   = ADDR@+CMD+HEXM(1)+HEXM(2)+...+HEXM(20)


In this case M()is simply a string of 20 printable characters.
```

6. Command Read MercurioSET

Sending this command to the charger it will read the entire set of characteristic parameters of the Mercurio.

```
COMMAND   : ADDR + "Q"  (2 bytes)

RETURN  : ADDR@ + CMD + HEXM[168] + HEXTxChkSum[4]

42 Short ==> 84 Bytes --> 2 + 168 + 4 = 174 bytes

CALCULATION OF DATA  :


      AMPEREH(A)   =    (M(1)+M(2)*28)* SIZE (W) / 5000
      VCYCLE (V)   =    (M(3)+M(4)*28)/64
      VSTANDBY(V)  =    (M(5)+M(6)*28)/64
      NBATT        =    (M(7)+M(8)*28)
      SIZE (W)     =    (M(9)+M(10)*28)*5000
      FMODE        =    (M(11)+M(12)*28)
      INMODE       =    (M(13)+M(14)*28)
      VBATTTH1(V)  =    (M(15)+M(16)*28)/64
      DELAYV1      =    M(17);M(18)             Reserved
      IBATTTH1(A)  =    (M(19)+M(20)*28)/8
      DELAYI1      =    M(21);M(22)             Reserved
      IBATTTH2(A)  =    (M(23)+M(24)*28)/8
      DELAYUP2     =    M(25);M(26)             Reserved
      DELAYDO2     =    M(27);M(28)             Reserved
      VMAX  (V)    =    ((M(29)+M(30)*28)*20/2000)-10
      VMIN  (V)    =    ((M(31)+M(32)*28)*20/2000)-10
      DELAY3(s)    =    (M(33)+M(34)*28)/50
      CONOFF       =    (M(35)+M(36)*28)
      C2SPEED      =    (M(37)+M(38)*28)
      RELAYM       =    (M(39)+M(40)*28)
      P[0](W)      =    (M(41)+M(42)*28)
      P[1](W)      =    (M(43)+M(44)*28)
      P[2](W)      =    (M(45)+M(46)*28)
      P[3](W)      =    (M(47)+M(48)*28)
      P[4](W)      =    (M(49)+M(50)*28)
      P[5](W)      =    (M(51)+M(52)*28)
      P[6](W)      =    (M(53)+M(54)*28)
      P[7](W)      =    (M(55)+M(56)*28)
      F[0](Hz)     =    1/((M(57)+M(58)*28)*40*10-6)
      F[1](Hz)     =    1/((M(59)+M(60)*28)*40*10-6)
      F[2](Hz)     =    1/((M(61)+M(62)*28)*40*10-6)
      F[3](Hz)     =    1/((M(63)+M(64)*28)*40*10-6)
      F[4](Hz)     =    1/((M(65)+M(66)*28)*40*10-6)
      F[5](Hz)     =    1/((M(67)+M(68)*28)*40*10-6)
      F[6](Hz)     =    1/((M(69)+M(70)*28)*40*10-6)
      F[7](Hz)     =    1/((M(71)+M(82)*28)*40*10-6)
      DPF          =    (M(73)+M(74)*28)/1024
      MAXSTIME(s)  =    (M(75)+M(76)*28)
      SLOPE(A/s)   =    (M(77)+M(78)*28)*6.25
      FSTART(Hz)   =    1/((M(79)+M(80)*28)*40*10-6)
      FSTOP(Hz)    =    1/((M(81)+M(82)*28)*40*10-6)
      DUMMY3       =    M(83);M(84)             Reserved

      TxChkSum     =    M(85)*28+M(86)
```

* Check validity of data :

```
communication    --->   ADDR - 128 = ADDR@
                        CMD        = "Q"
                        TxChkSum   = ADDR@+CMD+HEXM(1)+HEXM(2)+...+HEXM(84)
```

Legend:

VARIABLE	DESCRIPTION
Ampereh	Maximun current of battery charges
Vcycle	Vcycle (only read)
Vstandby	Vstandby (only read)
Nbatt	Number of battery
Size (BoardNum)	Size: 1 -> 5000 2 -> 10000 3 -> 15000
fmode (enable)	Mode of operation 0 -> ONOFF 1 -> 2SPEED 2 -> LINEARE (VARIABLE)
inmode (input_mode)	Type of input 10 -> DC1 11 -> AC1 31 -> AC3 111 -> DCAC1 131 -> DCAC3
VbattTH1	Start voltage charger
delayV1	RISERVATO
IbattTH1	Current cut-off, the charging completed
delayI1	RISERVATO
IbattTH2	Current threshold of dual speed
delayUp2	RISERVATO
delayDo2 (delayDown2)	RISERVATO
Vmax (pwm_lin_max)	Maximun voltage mode variable
Vmin(pwm_lin_min)	Minimun voltage mode variable
delay3	Delay tracking
Conoff (comp_onoff)	Polarity Relay ONOFF 1 -> “OPEN” Engine Off 1 -> “CLOSE” Engine On 0 -> “OPEN” Engine On 0 -> “CLOSE” Engine Off
C2speed (comp_2speed)	Polarity Relay Dual Speed 1 -> “OPEN” Engine High 1 -> “CLOSE” Engine Low 0 -> “OPEN” Engine Low 0 -> “CLOSE” Engine High
Relaym (rele_mod)	Relay operation mode selection 1 -> Normale 0 -> Meccanica
p[8] (potenza[8])	eight points of the power curve (power) p[0]>p[1]>….>p[7]
f[8] (pfreq[8])	eight points of the power curve (frequency) f[0]>f[1]>….>f[7]
DPF (fattore)	Displacement Power Factor
Maxstima (delay5)	Maximun time command is enabled (only mechanical mode)
Slope	Maximun slope output current (step of 6.25A/s)
fstart (pf_start)	Frequency threshold for considering the engine running
fstop (pf_stop)	Frequency threshold for considering the engine off
dummy3	RISERVATO - NON USATO

7. Command Write MercurioSET

Sending this command to the charger it will send the entire set of characteristic parameters of the Mercurio.

```
-------------------------------------------------------------
COMMAND   : ADDR + "U"  HEXM[168] + HEXTxChkSum[4] (174 bytes)

      (M(1)+M(2)*28)    = AMPEREH(A)/SIZE (W)*5000
      (M(3)+M(4)*28)    = VCYCLE (V)            Read Only
      (M(5)+M(6)*28)    = VSTANDBY(V)           Read Only
      (M(7)+M(8)*28)    = NBATT
      (M(9)+M(10)*28)   = SIZE(W)/5000
      (M(11)+M(12)*28)  = FMODE
      (M(13)+M(14)*28)  = INMODE
      (M(15)+M(16)*28)  = VBATTTH1(V)*64
      M(17);M(18)       = DELAYV1               Reserved
      (M(19)+M(20)*28)  = IBATTTH1(A)*8
      M(21);M(22)       = DELAYI1               Reserved
      (M(23)+M(24)*28)  = IBATTTH2(A)*8
      M(25);M(26)       = DELAYUP2              Reserved
      M(27);M(28)       = DELAYDO2              Reserved
      (M(29)+M(30)*28)  = (VMAX(V)+10)*100
      (M(31)+M(32)*28)  = (VMIN(V)+10)*100
      (M(33)+M(34)*28)  = DELAY3(s)*50
      (M(35)+M(36)*28)  = CONOFF
      (M(37)+M(38)*28)  = C2SPEED
      (M(39)+M(40)*28)  = RELAYM
      (M(41)+M(42)*28)  = P[0](W)
      (M(43)+M(44)*28)  = P[1](W)
      (M(45)+M(46)*28)  = P[2](W)
      (M(47)+M(48)*28)  = P[3](W)
      (M(49)+M(50)*28)  = P[4](W)
      (M(51)+M(52)*28)  = P[5](W)
      (M(53)+M(54)*28)  = P[6](W)
      (M(55)+M(56)*28)  = P[7](W)
      (M(57)+M(58)*28)  = 1/(F[0](Hz)*40*10-6)
      (M(59)+M(60)*28)  = 1/(F[1](Hz)*40*10-6)
      (M(61)+M(62)*28)  = 1/(F[2](Hz)*40*10-6)
      (M(63)+M(64)*28)  = 1/(F[3](Hz)*40*10-6)
      (M(65)+M(66)*28)  = 1/(F[4](Hz)*40*10-6)
      (M(67)+M(68)*28)  = 1/(F[5](Hz)*40*10-6)
      (M(69)+M(70)*28)  = 1/(F[6](Hz)*40*10-6)
      (M(71)+M(82)*28)  = 1/(F[7](Hz)*40*10-6)
      (M(73)+M(74)*28)  = DPF*1024
      (M(75)+M(76)*28)  = MAXSTIME(s)
      (M(77)+M(78)*28)  = SLOPE(A/s)/6.25
      (M(79)+M(80)*28)  = 1/(FSTART(Hz)*40*10-6)
      (M(81)+M(82)*28)  = 1/(FSTOP(Hz)*40*10-6)
      M(83);M(84)       = DUMMY3                Reserved

RISPOSTA  : ADDR@ + "P"  (Ack)
```

N.B. It is recommended that before writing the Mercurio SET perform a read command, and change only the values needed.

REVISION HISTORY		
Revision	**Date**	**Description**
rev.00	08/13	Initial Release - DRAFT
rev.01	09/13	Modified page 41-42 and Table 4
rev.02	09/13	Modified Table 9
rev.03	12/13	From release R1 to R3-1
rev.04	07/14	Added Appendix A

MECC ALTE SPA (HQ)

Via Roma
20 – 36051 Creazzo
Vicenza – ITALY

T: +39 0444 396111
E: info@meccalte.it
aftersales@meccalte.it

MECC ALTE PORTABLE

Via A. Volta
1 37038 Soave
Verona – ITALY

T: +39 0456 173411
E: info@meccalte.it

MECC ALTE POWER PRODUCTS

Via Melaro
2 – 36075 Montecchio
Maggiore (VI) – ITALY

T: +39 0444 1831295
E: info@meccalte.it

ZANARDI ALTERNATORI

Via Dei Laghi
48/B – 36077 Altavilla
Vicenza – ITALY

T: +39 0444 370799
E: info@zanardialternatori.it

UNITED KINGDOM

Mecc Alte U.K. LTD
6 Lands' End Way
Oakham
Rutland LE15 6RF

T: +44 (0) 1572 771160
E: info@meccalte.co.uk

SPAIN

Mecc Alte España S.A.
C/ Rio Taibilla, 2
Polig. Ind. Los Valeros
03178 Benijofar (Alicante)

T: +34 (0) 96 6702152
E: info@meccalte.es

CHINA

Mecc Alte Alternator Haimen LTD
755 Nanhai East Rd
Jiangsu HEDZ 226100 PRC

T: +86 (0) 513 82325758
E: info@meccalte.cn

INDIA

Mecc Alte India PVT LTD
Plot NO: 1, Sanaswadi
Talegaon
Dhamdhere Road Taluka:
Shirur, District:
Pune - 412208
Maharashtra, India

T: +91 2137 673200
E: info@meccalte.in

U.S.A. AND CANADA

Mecc Alte Inc.
1229 Adams Drive
McHenry, IL, 60051

T: +1 815 344 0530
E: info@meccalte.us

GERMANY

Mecc Alte Generatoren GmbH
Bucher Hang 2
D-87448 Waltenhofen

T. +49 (0)831 540755 0

E: info@meccalte.de

AUSTRALIA

Mecc Alte Alternators PTY LTD
10 Duncan Road, PO Box 1046
Dry Creek, 5094, South
Australia

T: +61 (0) 8 8349 8422

E: info@meccalte.com.au

FRANCE

Mecc Alte International S.A.
Z.E. la Gagnerie
16330 St. Amant de Boixe

T: +33 (0) 545 397562
E: info@meccalte.fr

FAR EAST

Mecc Alte (F.E.) PTE LTD
10V Enterprise Road, Enterprise 10
Singapore 627679

T: +65 62 657122
E: info@meccalte.com.sg

mecc alte

www.meccalte.com

The world's largest independent producer of alternators 1 – 5,000kVA

MASPA: 07.2014 | V04