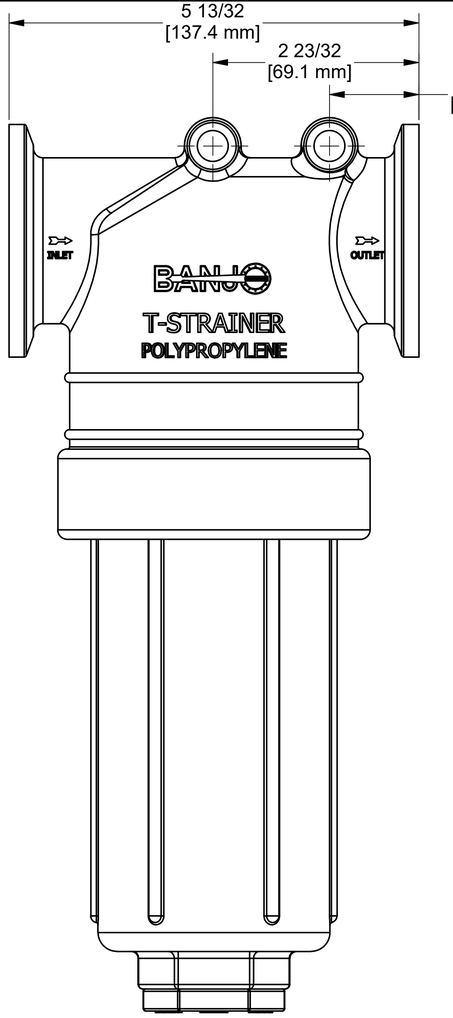

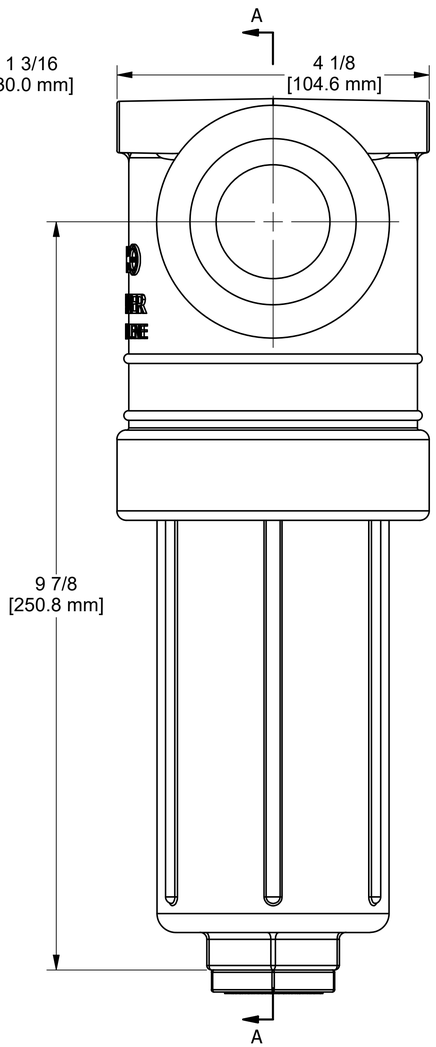

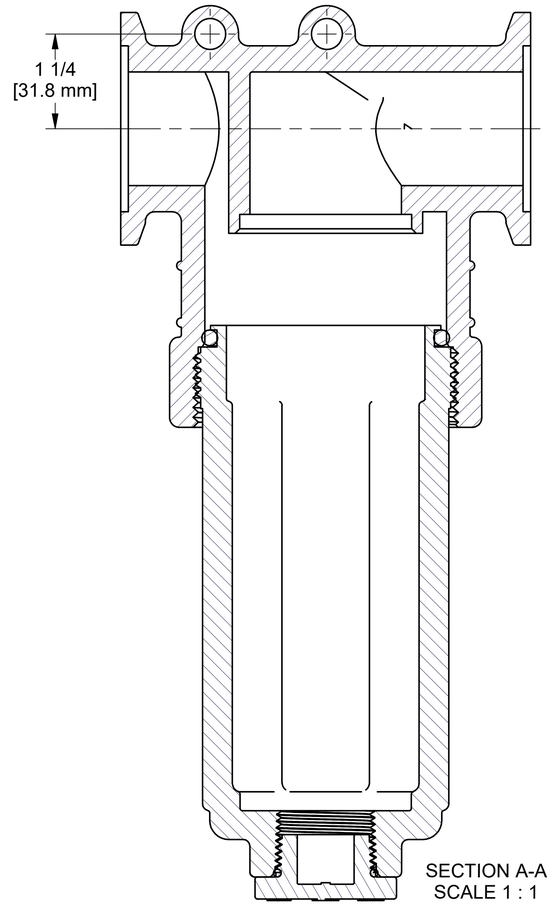

SECTION A-A
SCALE 1 : 1



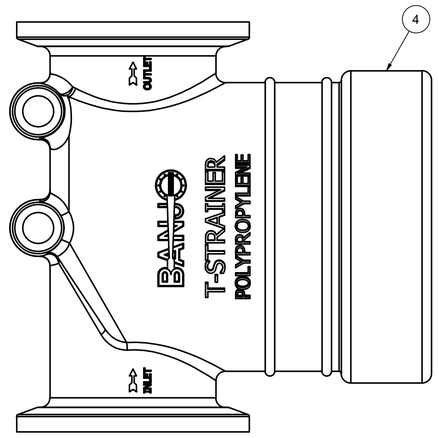

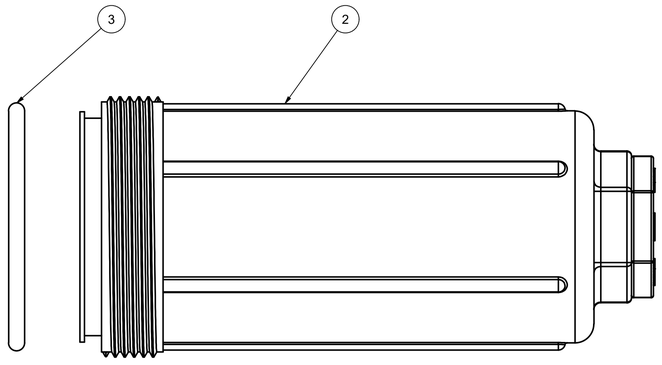

Parts List			
ITEM	QTY	PART NUMBER	DESCRIPTION
1	1	LST1225D	225 PSI DECAL (N/S)
2	1	LST150-B	1 1/2" T-STRAINER BOWL ASSEMBLY
3	1	LST150-G	AS568A -336 O-RING, EPDM, BLACK
4	1	MLST150-H	1-1/2"STRNR W/2" MANIFOLD CONN

THIS DRAWING AND ALL INFORMATION CONTAINED THEREON ARE THE EXCLUSIVE PROPERTY OF BANJO CORPORATION.

UNLESS SPECIFICALLY NOTED, THIS DRAWING AND ITEMS SHOWN ON THIS DRAWING ARE SUBJECT TO CHANGE AT ANY TIME.

BANJO CORPORATION

BANJO CORPORATION
150 BANJO DRIVE, CRAWFORDSVILLE, IN 47933
WEB SITE: WWW.BANJOCORP.COM
E-MAIL: BANJOSALES@IDEXCORP.COM

DESCRIPTION
2" MANIFOLD T LINE STRAINER, HEAD & BOWL ONLY

PART NUMBER
MLST150-HB