PARTS LIST			
ITEM	QTY	PART NUMBER	DESCRIPTION
1	1	LST150-B	1-1/2" POLY T STRAINER BOWL
1-1	1	LSQ200-PL	1" NPT LINE STRAINER PLUG
1-2	1	LSQ200-R	AS568A -123 O-RING, EPDM, BLACK
1-3	1	LST150-XB	1 1/2" T-STRAINER BOWL
2	1	LST150-G	AS568A -336 O-RING, EPDM, BLACK
3	1	LST225D	DECAL (N/S)
4	1	LST1580	1 1/2" LST SCREEN - 80 MESH
5	1	MLST150-H	1-1/2"STRNR W/2" MANIFOLD CONN

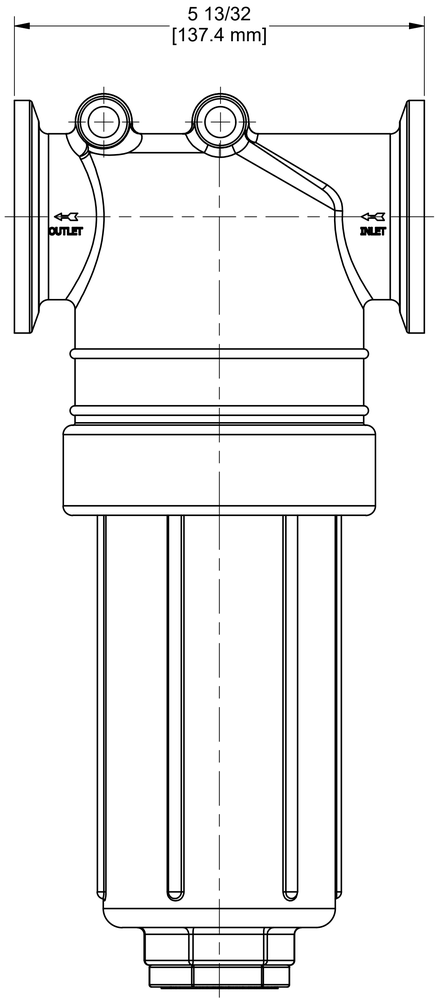

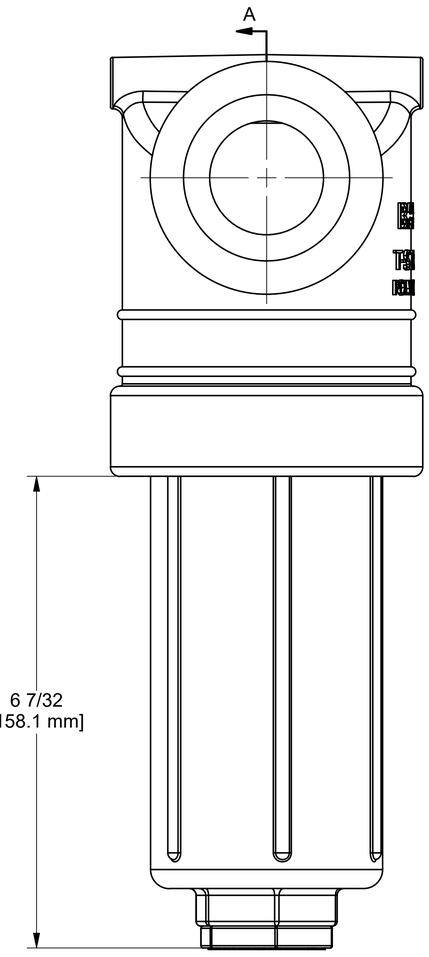

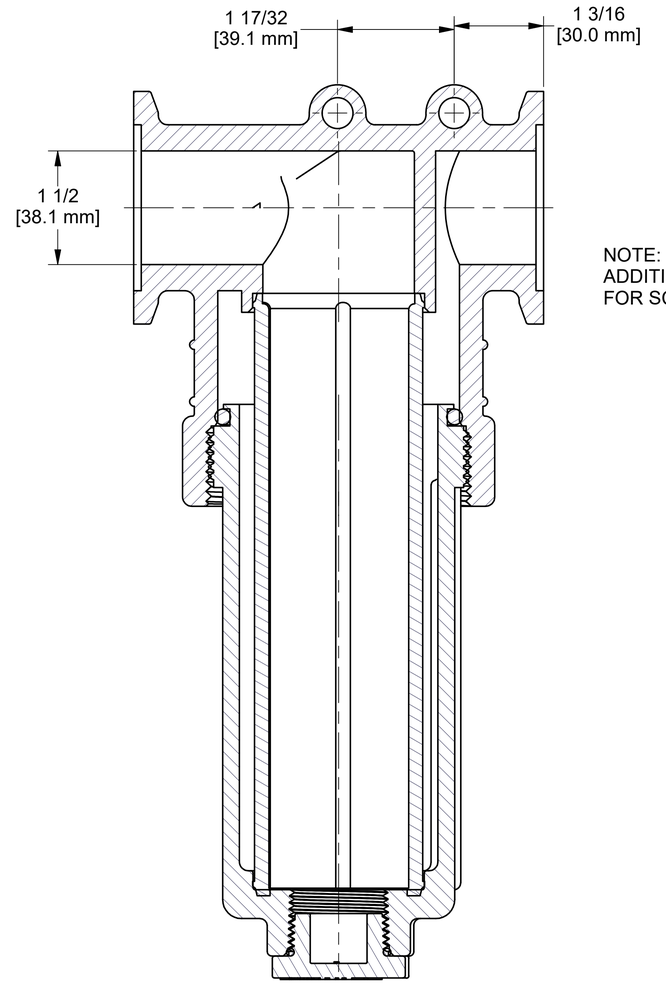

SECTION A-A
SCALE 1 : 1

NOTE:
ADDITIONAL CLEARANCE REQ'D
FOR SCREEN REMOVAL: 8"



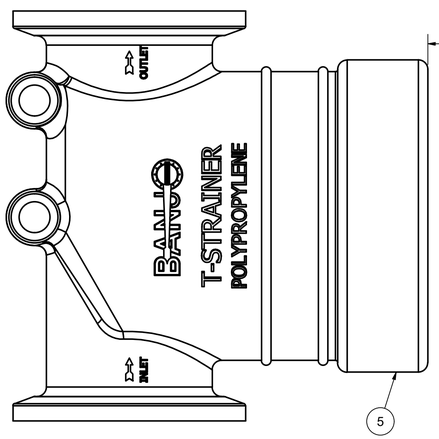

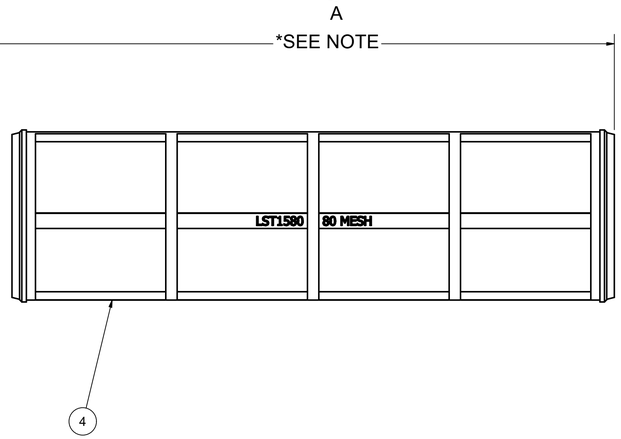

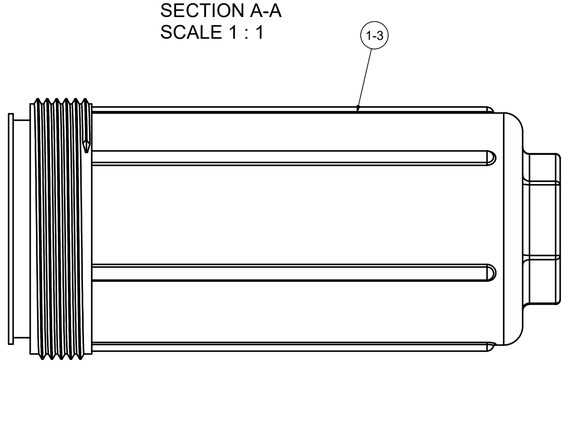

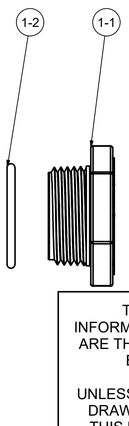

5 4 2

THIS DRAWING AND ALL INFORMATION CONTAINED THEREON ARE THE EXCLUSIVE PROPERTY OF BANJO CORPORATION.

UNLESS SPECIFICALLY NOTED, THIS DRAWING AND ITEMS SHOWN ON THIS DRAWING ARE SUBJECT TO CHANGE AT ANY TIME.

BANJO CORPORATION

BANJO CORPORATION
150 BANJO DRIVE, CRAWFORDSVILLE, IN 47933
WEB SITE: WWW.BANJOCORP.COM
E-MAIL: BANJOSALES@IDEXCORP.COM

DESCRIPTION
2" STNRD PORT T STRNR-80 MESH

PART NUMBER
MLST150-80