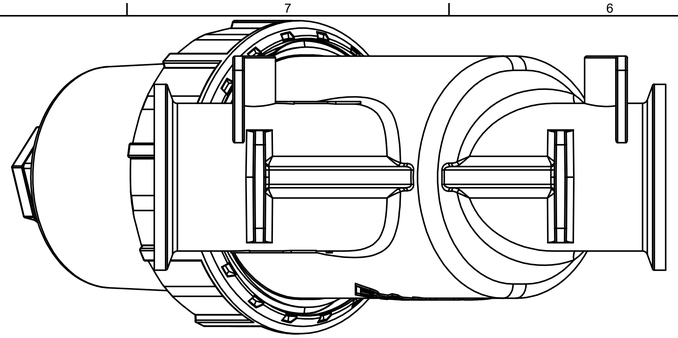

Parts List			
ITEM	QTY	PART NUMBER	DESCRIPTION
1	1	LST225D	DECAL (N/S)
2	1	LST250SS	2" LST SCREEN - 50 MESH
3	1	MLS220C1	MLS220 Cap Assembly
4	1	MLS220R1	2" FP LS RETAINING RING
5	1	MLS222B	MLS222 BODY WITH RIBS

PART NUMBER
LABEL,
CENTERED AS
SHOWN.

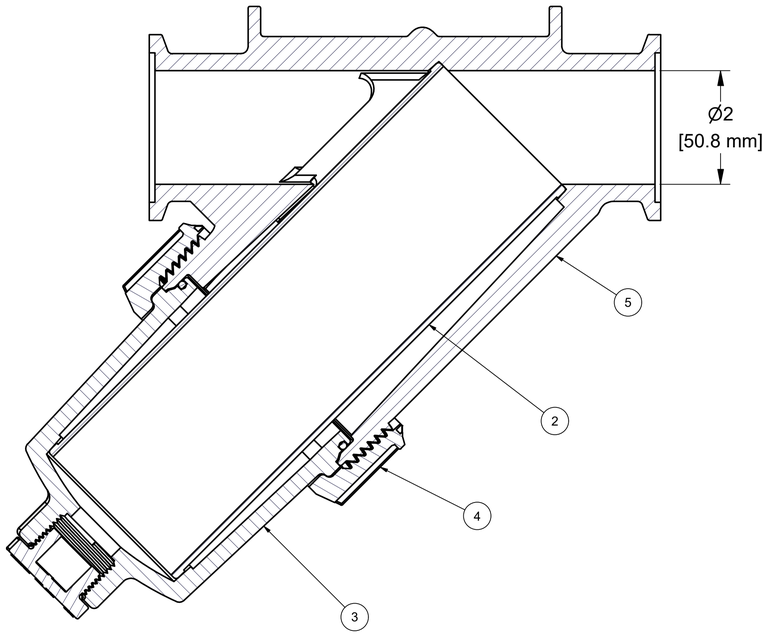

SECTION A-A

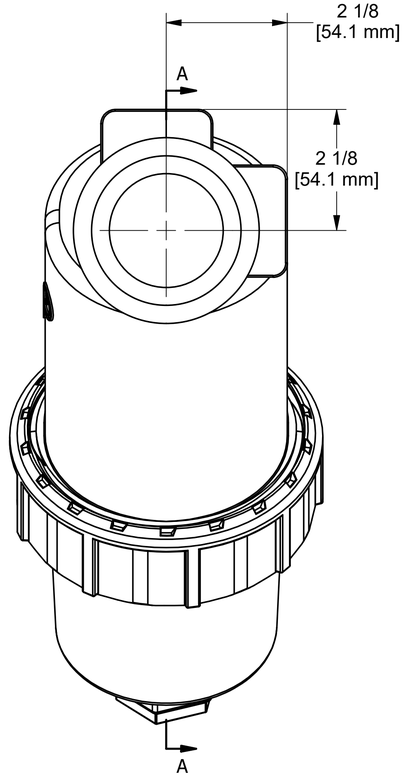

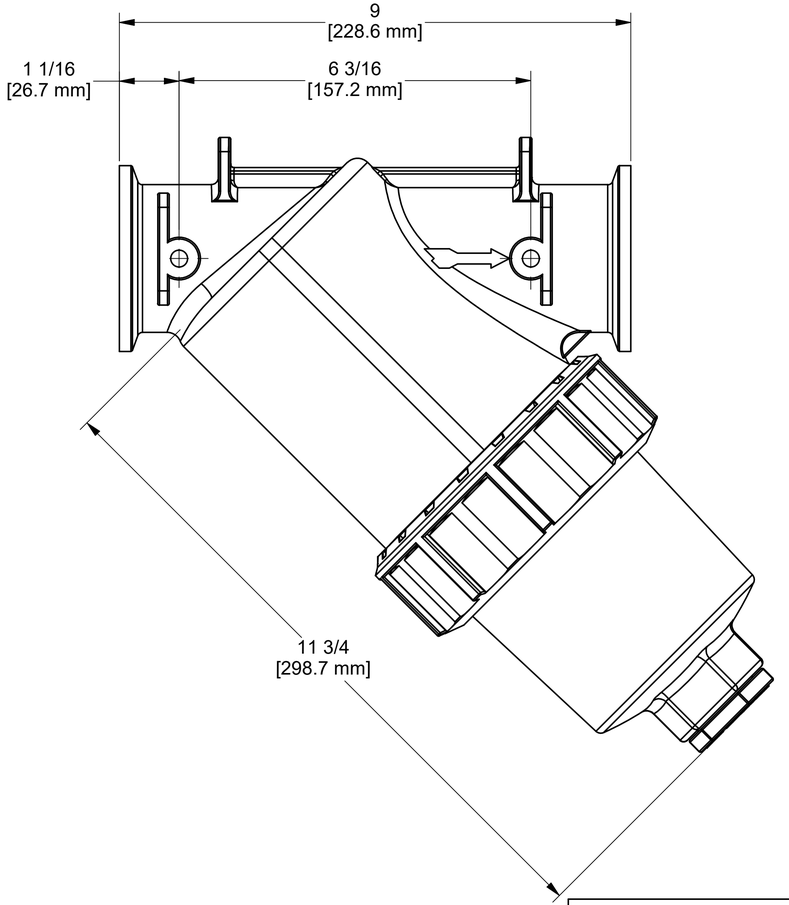

BANJO® CORPORATION

THIS DRAWING AND ALL INFORMATION CONTAINED THEREON ARE THE EXCLUSIVE PROPERTY OF BANJO CORPORATION.

UNLESS SPECIFICALLY NOTED, THIS DRAWING AND ITEMS SHOWN ON THIS DRAWING ARE SUBJECT TO CHANGE AT ANY TIME.

BANJO CORPORATION
150 BANJO DRIVE, CRAWFORDSVILLE, IN 47933
WEB SITE: WWW.BANJOCORP.COM
E-MAIL: BANJOSALES@IDEXCORP.COM

DESCRIPTION

MLS222 SERIES STRAINER 50 MESH

PART NUMBER

MLS222-50