TRIPLEX

TRIPLEX

GENERAL PUMP *A member of the Interpump Group*

MH Series

High Pressure Plunger Pump

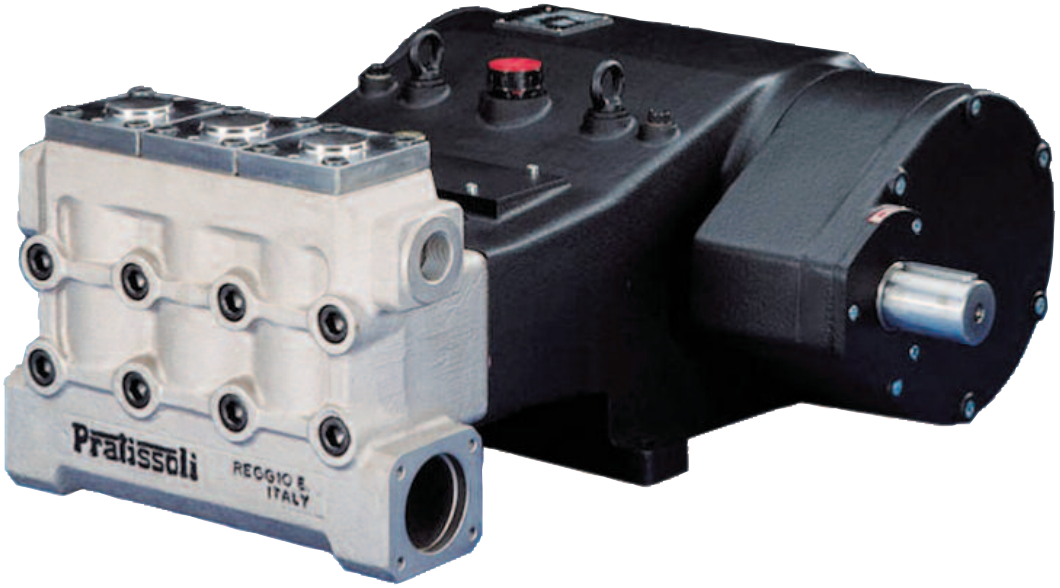

SPECIFICATIONS

Pump Model	MH45	MH50	MH55	MH60	MH65
Maximum Volume	51.2 GPM	63.4 GPM	76.6 GPM	91.1 GPM	107 GPM
Maximum Discharge Pressure	4350 PSI	3500 PSI	2900 PSI	2400 PSI	2050 PSI
Horsepower	153 EBHP	152 EBHP	152 EBHP	150 EBHP	150 EBHP
Maximum Pump Speed	1500 / 1800				
Maximum Inlet Pressure	45 PSI				
Minimum Inlet	5.2 PSI	5.4 PSI	5.5 PSI	5.8 PSI	6.1 PSI
Plunger Bore	1.772 in./45 mm	1.969 in./50 mm	2.165 in./55 mm	2.362 in./60 mm	2.559 in./65 mm
Plunger Stroke	2.835 in. / 72 mm				
Crankcase Oil Capacity	466.5 oz.				
Maximum Fluid Temperature	140^0 F				
Inlet Port Thread	3” NPT-F Flange				
Discharge Port Thread	1-1/4” NPT-F				
Shaft Diameter	1.969 in. / 55 mm				
Weight	880 lbs.				
Dimensions	33.3” x 28.2” x 13.5”				

FEATURES

- Double pressure packings.
- Vertical fitted valves.
- Water-spill venting.
- Oil-bath mechanical parts with splash lubrication.
- Operated by pulley cardan shaft or flexible joint.
- External gear box.

MATERIALS

- Pump body in cast iron.
- Head in chemical nickel-treated spheroidal cast iron.
- Self-adjusting shaft bearings with double roller rim.
- Forged connecting rods with antifriction bearings.
- Crankshaft in hardened and tempered alloy steel.
- Guide plungers in surface treated spheroidal cast iron.
- Plungers in stainless steel with ceramic coating.
- Valves made in stainless steel and bronze.

General Pump is a member of the Interpump Group

GENERAL PUMP

DIMENSIONAL DRAWING

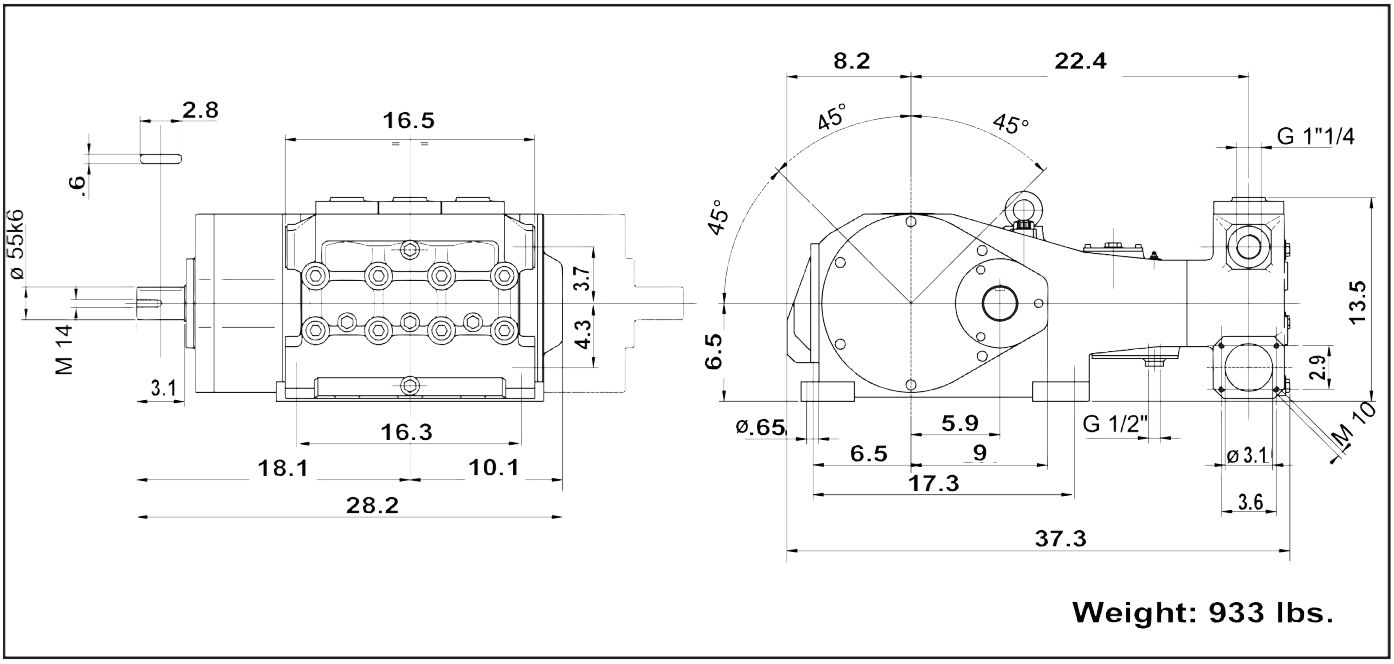

Weight: 933 lbs.

GENERAL PUMP 1174 Northland Drive • Mendota Heights, MN 55120
Phone: (651)686-2199 • Fax: (800)535-1745 • e-mail: sales@gpcompanies.com • www.generalpump.com

GENERAL PUMP