FLOW METERS
INSTRUCTION MANUAL

1", 2" & 3" FLOW METERS



BANJO Liquid Handling Products

BANJO CORPORATION | A Unit of IDEX Corporation
150 Banjo Drive, Crawfordsville, IN 47933 U.S.A.
banjocorp.com | Telephone: (765) 362-7367

BANJOCORP.COM

OVERVIEW

Read these instructions and the instructions before operating the flow meter.

The Banjo MFM flow meter series are full-bore, plastic-bodied electromagnetic flow meters designed for flow and usage monitoring applications in 1", 2" or 3" pipe. The polypropylene flow tube offers corrosion resistance to a wide range of chemicals. Its light weight and clamp flanges allow it to be easily installed or removed from the pipe for inspection.

With no moving parts, the magmeter permits unobstructed flow, minimizing flow disturbances. The MFM Series can be used in piping configurations where there is little space between the meter and valve. The Flow Meter Series, like other magmeters, are resistant to wear from debris. Since there are no bearings or propeller to wear out, downtime and maintenance are kept to a minimum. Because there are no mechanical parts in the flow stream, the meter tolerates high flows without damage. Please note that flow does not automatically turn the meter on.

The hinged, polyethylene cover protects from dust and UV rays, while permitting easy access to the LCD flow rate and total display. The electronics housing is made of rugged powder-coated die-cast aluminum. Flow rate and total can be displayed in Gallons or Liters.

The Flow Meter Series are used for tracking flow rates and total flow in usage monitoring applications. These would include wells, industrial wastewater, leach mining discharge, cooling tower deduct metering, turf and landscape applications, and other water reclamation operations.

The standard flow meters are battery-operated units for use when pulse output is not required. The batteries are user replaceable with an approximate 1-year life under continuous use, or more depending on the duty cycle. The flow meters shut off after 15 minutes of inactivity to preserve battery life.

WARNINGS

OPERATION WARNING

Will not read petroleum based liquids.

WARNING! DO NOT USE WITH FLAMMABLE LIQUIDS.

Do not use flammable liquids. Failure to follow this warning can result in explosion, serious bodily injury or death.

STORAGE WARNING

Remove batteries prior to long periods without use to avoid corrosion.

FEATURES

1", 2" & 3" FLOW METERS



DIMENSIONS

FM100

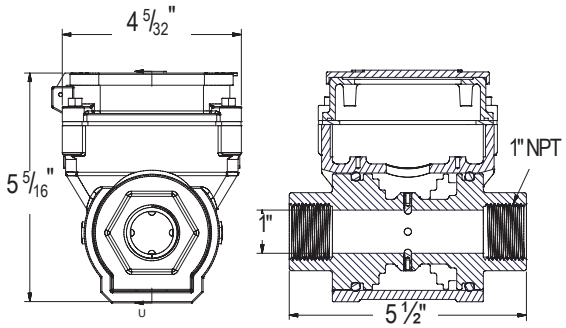

MFM100

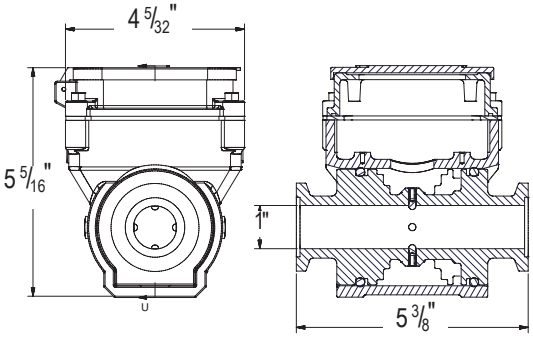

MFM220

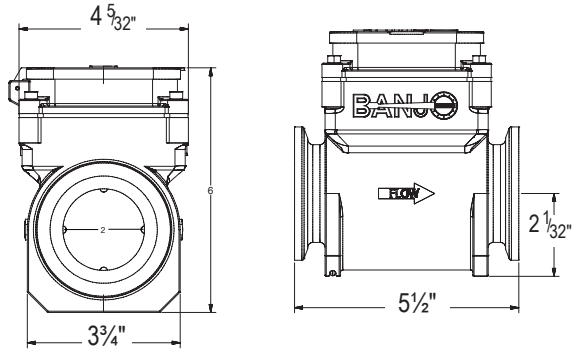

MFM300

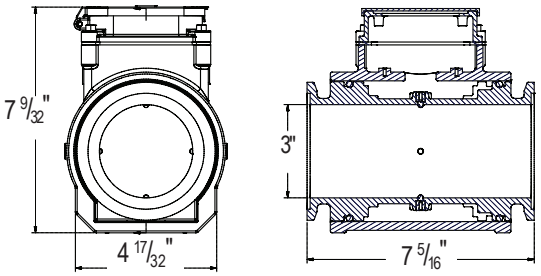

INSTRUCTIONS:



1

1. When placing the flow meter in line, it is important to rotate the flow meter so that it is approximately at a 45-degree angle. (See figure 1) This will improve performance of the flow meter. The flow meter can be placed vertical as long as flow is sufficient to fill the pipe. EP is short for "Empty Pipe". It is displayed when there is not enough liquid in the flow meter to cover the electrodes.



2

2. There are 3 photoeyes located on the face of the flow meter. Note: These are not buttons so you will not push them, instead, to activate you must hold your finger over the photoeye for 2-4 seconds. To reset the running total you must hold your finger over both the “batch reset” and the “batch/total” photoeyes. If you would like liters rather than gallons, you will need to hold your finger over the first and third photoeyes at the same time. (See figure 2)

3. There are six (6) AA batteries located inside the flow meter. To replace the batteries, simply remove the four cover bolts and gently remove the top cover. Replace batteries and fasten cover back in place. Be careful not to pinch any wires when assembling the cover. It is a good idea to change the batteries yearly.

4. The flow rate of the meter is designed to have an unlimited flow, meaning that the meter will read as much flow as one can push though a full port coupling. However, the accuracy of the meter decreases as the meter reaches flows under GPM listed below:

1" =11 GPM From 2.3 to 11 GPM the meter is within 2-3% accuracy.
2" = 30 GPM From 6 to 30 GPM the meter is within 2-3% accuracy.
3" = 67 GPM From 14 to 67 GPM the meter is within 2-3% accuracy.



6

6. It is recommended to have at least 10x the inside diameter of the flow meter of straight pipe before and after the flow meter.

1" = 10 inches before and after
2" = 20 inches before and after
3" = 30 inches before and after

5. It is advisable to thoroughly clean the meter and the electrodes at least once a year. This can be done by gently rubbing the electrodes with a piece of emery cloth.

7. The cover can be rotated. To rotate cover 90°, remove the 4 cover bolts and carefully rotate the cover to the desired position. Take note not to pull or pinch any of the connecting wires. To rotate the cover 180°, remove the 4 cover bolts, the 6 AA batteries and the 2 screws that hold the battery holder in place. Then rotate the battery holder and the cover together to the desired location. Take note not to pull or pinch any of the connecting wires.

SPECIFICATIONS

Pipe Size		1" Full Port	2" Full Port	3" Full Port
Fittings		Flange Clamps/NPT Pipe Fittings	Flange Clamps	Flange Clamps
Pressure		150 PSI (10.3 BAR) working pressure @ 70°F	150 PSI (10.3 BAR) working pressure @ 70°F	150 PSI (10.3 BAR) working pressure @ 70°F
Operating Temperature Range		10° to 130°F (-12° to 54°C)	10° to 130°F (-12° to 54°C)	10° to 130°F (-12° to 54°C)
Accuracy		+/-1% of reading from 100% to 10% of full scale	+/-1% of reading from 100% to 10% of full scale	+/-1% of reading from 100% to 10% of full scale
		+/-3% of reading from 2% of full scale to 10% of full scale. Low flow cutoff at 2% of full scale	+/-3% of reading from 2% of full scale to 10% of full scale. Low flow cutoff at 2% of full scale	+/-3% of reading from 2% of full scale to 10% of full scale. Low flow cutoff at 2% of full scale
Flow Range	Minimum	2.3 GPM (8.7 LPM)	6 GPM (22.7 LPM)	14 GPM (53 LPM)
	Maximum	110 GPM (416.4 LPM)	300 GPM (1136 LPM)	670 GPM (2536 LPM)
Materials	Body	Glass-filled polypropylene	Glass-filled polypropylene	Glass-filled polypropylene
	Electrodes	316 stainless steel	316 stainless steel	316 stainless steel
	Electronics Housing	Die cast aluminum, powder-coated	Die cast aluminum, powder-coated	Die cast aluminum, powder-coated
	Display Cover	Polyethylene	Polyethylene	Polyethylene
Display		Rate	Rate	Rate
	Digits	6	6	6
	Units	Gallons/Minute	Gallons/Minute	Gallons/Minute
		Liters/Minute	Liters/Minute	Liters/Minute
Power		6 AA 1.5V Lithium cells, replaceable Life: 1 year with meter in use; 3 years dry	6AA 1.5V Lithium cells, replaceable Life: 1 year with meter in use; 3 years dry	AA 1.5V Lithium cells, replaceable Life: 1 year with meter in use; 3 years dry
Empty Pipe Detection		Hardware/software, conductivity-based	Hardware/software, conductivity-based	Hardware/software, conductivity-based
Conductivity		>20 microSiemens	>20 microSiemens	>20 microSiemens
Environmental		NEMA 4X standard; -40° to 176°F (-40° to 80° C) storage	NEMA 4X standard; -40° to 176°F (-40° to 80° C) storage	NEMA 4X standard; -40° to 176°F (-40° to 80° C) storage

INSTALLATION INSTRUCTIONS:

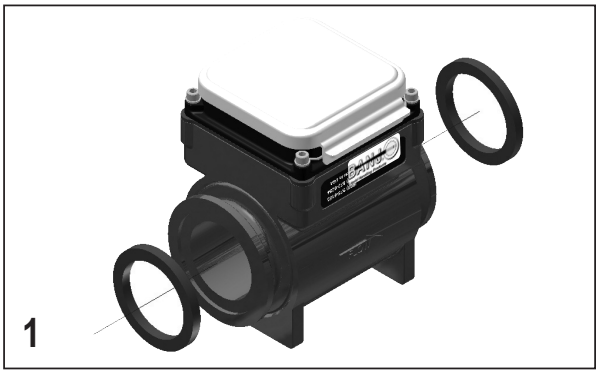

Position gasket at either end. Note: if hose is used, smooth bore is recommended.

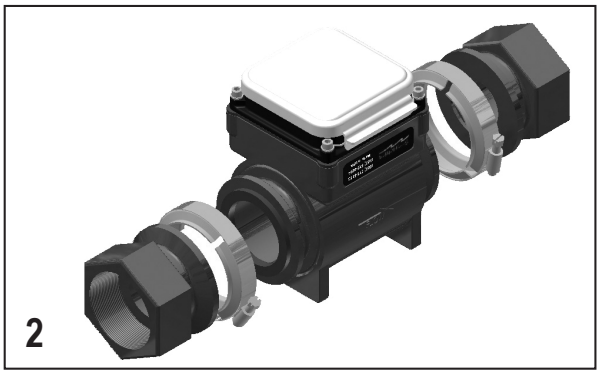

Place adapter against gasket, open screw clamps to clear flanges.

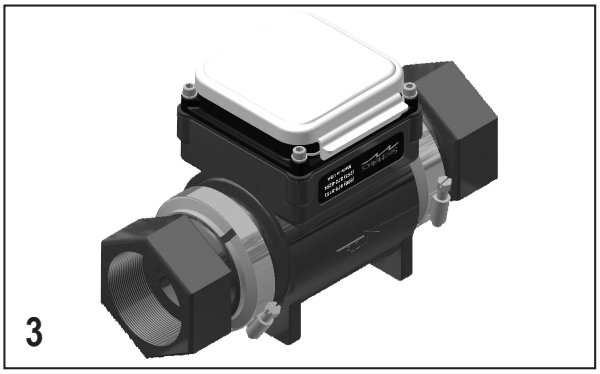

Place screw clamps over both adapter and meter flanges and tighten screws. This is an all position meter which can be installed either vertically or horizontally, register up, down or angled. However, entrained air or solids may make some positions preferable to others. See the position diagram for guidance.

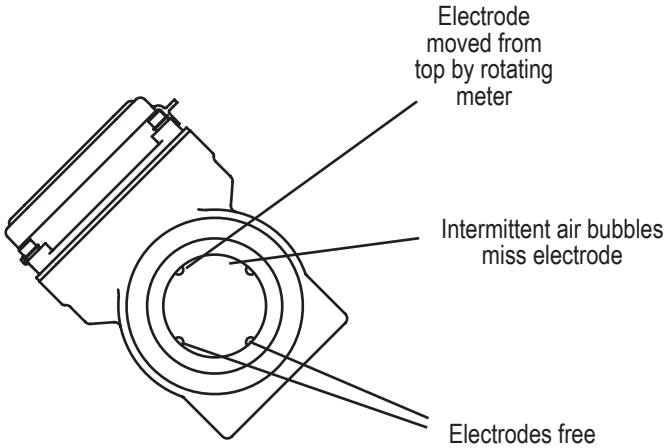

Recommended:
May prevent sediment or bubble problems

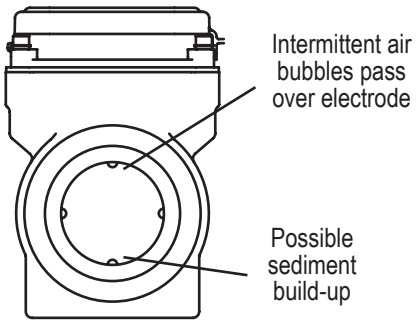

Less Ideal:
Air bubbles and sediment on the electrodes can affect accuracy

MAINTENANCE & TROUBLE SHOOTING:

There are no user-serviceable parts in the MFM Series meters except the batteries.

When the “Lo Batt” indicator appears, the batteries should be changed. Six AA 1.5V Lithium cells are required. Batteries can be purchased locally from most retail locations. To change the batteries, first remove the four screws which hold the top cover in place. Be careful not to lose the washers. Move the top cover to one side and remove the foam retainer which covers the battery tray. Remove the old batteries and replace them with fresh ones, taking care to follow the polarity indicators in the battery tray. Replace the foam retainer, then put the top cover back in place. Put the four screws with washers back and tighten them firmly.

PROBLEM	PROBABLE CAUSE	POSSIBLE SOLUTION
Blank Display	Batteries dead or incorrectly installed	Check polarity, replace batteries
Reading “-EP-”	Empty or partly filled pipe. Excessive air pockets or foaming	Rearrange piping to ensure full pipe
Flow but no flow rate reading	Heavily coated electrodes	Remove meter and wipe electrodes

Please see banjocorp.com for more information

BANJO®
Liquid Handling Products

BANJO CORPORATION
A Unit of IDEX Corporation
150 Banjo Drive
Crawfordsville, IN 47933 U.S.A.
Telephone: (765) 362-7367
Tech Sales: (888) 705-7020
Fax: (765) 362-0744
banjocorp.com
#yellowhandle

© Copyright 2021 Banjo Corporation. All Rights Reserved.
BJO_MAN_KK-101_1.5_2_3InchFlowMeterManual_Rev0921