PARTS LIST			
ITEM	QTY	PART NUMBER	DESCRIPTION
1	1	EP62C10523A	EVX ACT 4S WWC 5W 24V OP/CL-VFY 180° ROTATION
2	1	EVP30001	EV U-PIN
3	1	MEVX300BLX	3" FP BL MANIFOLD VALVE ONLY

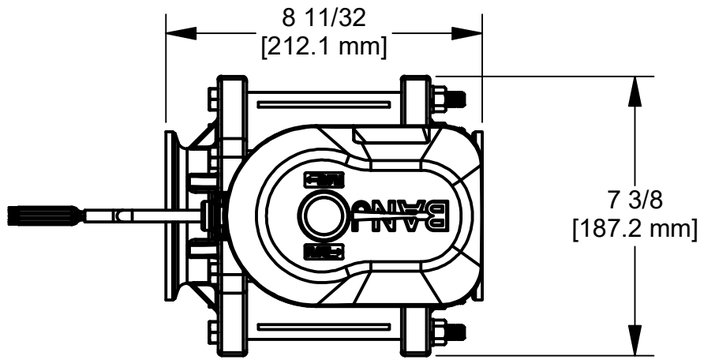

NOTE:

WIRING:
RED = +24VDC
BLACK = GND
WHITE = +24VDC (OPEN @ PORT 1), 0VDC (OPEN @ PORT 2)
GREEN = +24VDC FEEDBACK (OPEN @ PORT 1)
BROWN = +24VDC FEEDBACK (OPEN @ PORT 2)

8S TOTAL CYCLE TIME BETWEEN PORTS

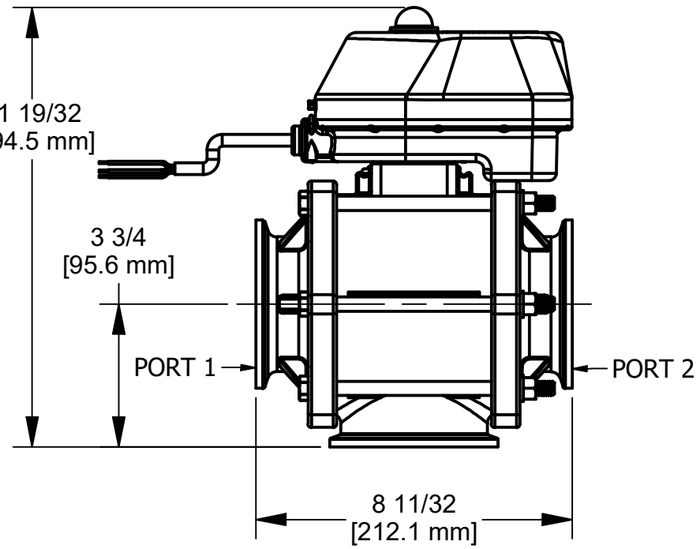

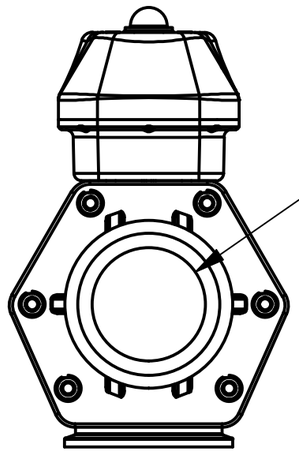

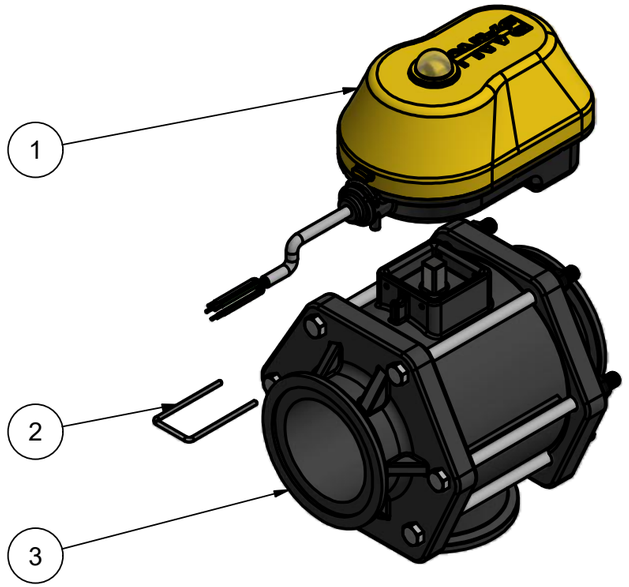

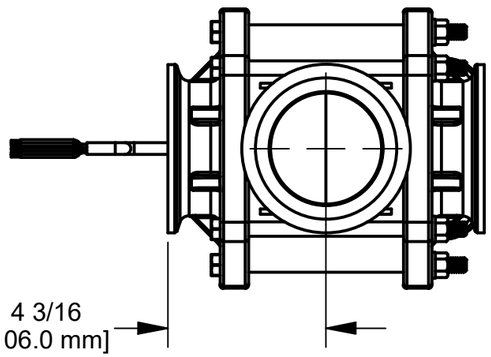

UNLESS OTHERWISE SPECIFIED
ALL DIMENSIONS ARE IN INCHES
GENERAL TOLERANCES:
MOLDED: 0.00 = ±0.025; 0.000 = ±0.010
MACHINED/PURCHASED: 0.00 = ±0.010; 0.000 = ±0.005
FRACTIONS 1/X = ±1/32
ANGLES = ±5°
BREAK ALL SHOWN CORNERS W/ R1/32

DRAWN AMB	9/20/2020
APPROVED CKA	9/28/2020
PRINT REVIEWED CKA	9/28/2020
MATERIAL	
FINISH	SCALE 1 / 4

BANJO CORPORATION
150 BANJO DRIVE, CRAWFORDSVILLE, IN 47933

DESCRIPTION: MEVX 3" FP BL 4S WWC 3W 24V

DWG NO MEVX300BL24F3.idw		DWG TYPE INF	REV 00
PART NO MEVX300BL24F3	SIZE B	SHEET 2 OF 2	