Parts List			
ITEM	QTY	PART NUMBER	DESCRIPTION
1	1	AQ206V	#206 QUAD RING, FKM
2	1	EVP25151	ELEC. VALVE STEM
3	1	MEVX25354AS	2" FP SL VE BODY
4	4	V20018	3/8" LOCKWASHER
5	4	V20019	3/8" HEX NUT
6	4	V25017	3/8-16 X 4 1/2" HHCS
7	2	V25264	CUSTOM BODY O-RING
8	2	VE25258A	2" FP VE Seat TFM
9	1	VE25355	3" FP VE 3-Way SS Ball
10	2	VE25378A	2" FP VE 4 Bolt Manifold Endplate

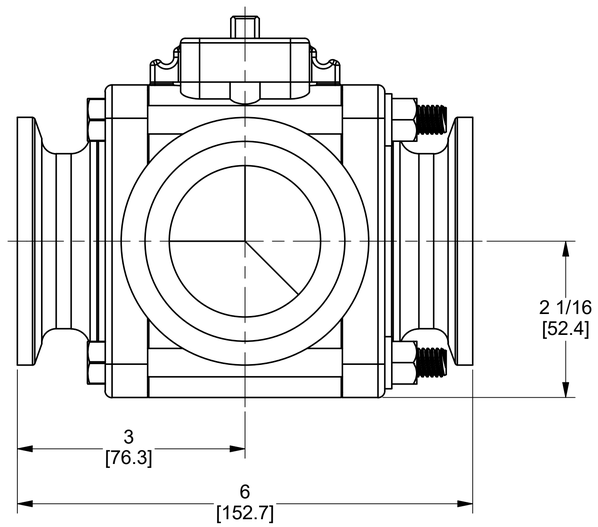

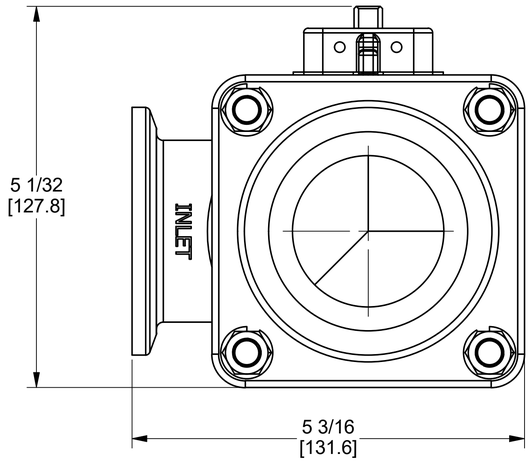

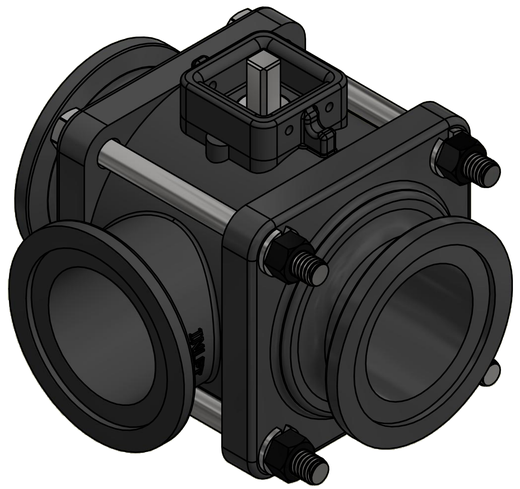

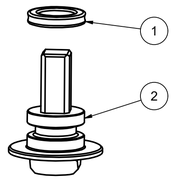

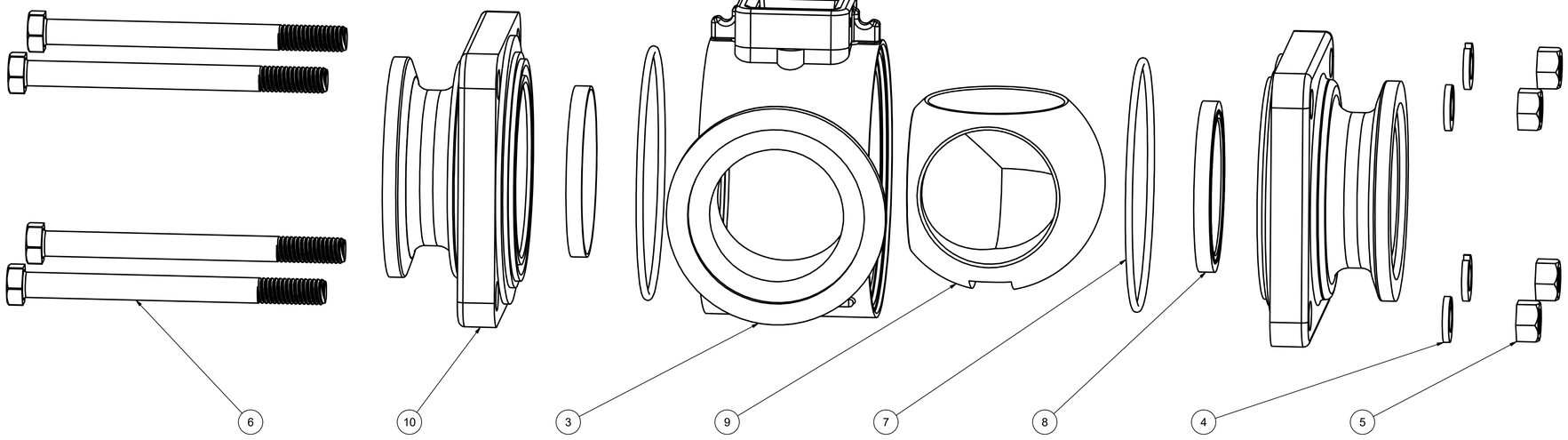

BANJO CORPORATION

THIS DRAWING AND ALL INFORMATION CONTAINED THEREON ARE THE EXCLUSIVE PROPERTY OF BANJO CORPORATION.

UNLESS SPECIFICALLY NOTED, THIS DRAWING AND ITEMS SHOWN ON THIS DRAWING ARE SUBJECT TO CHANGE AT ANY TIME.

BANJO CORPORATION
150 BANJO DRIVE, CRAWFORDSVILLE, IN 47933
WEB SITE: WWW.BANJOCORP.COM
E-MAIL: BANJOSALES@IDEXCORP.COM

DESCRIPTION

2" FP SL Manifold Valve Only

PART NUMBER

MEVX220SLX