Parts List			
ITEM	QTY	PART NUMBER	DESCRIPTION
1	2	A238V	AS568A -238 O-RING, FKM, BLACK W/ GREEN DOT
2	1	AQ206V	#206 QUAD RING, FKM
3	1	EVP25151	EVX VALVE SS STEM 2"FP BOLTED
4	1	MEVX25354AB	2" FP BL EVX BODY
5	4	V20018	3/8" LOCKWASHER
6	4	V20019	3/8-16 HEX NUT
7	4	V25017	3/8-16 X 4 1/2" HHCS
8	2	VE25258A	2" FP VE Seat TFM
9	1	VE25355	2" FP VE 3-WAY BALL, SS
10	2	VE25378A	2"FP 4-BOLT MANIFOLD ENDLATE, MACHINED

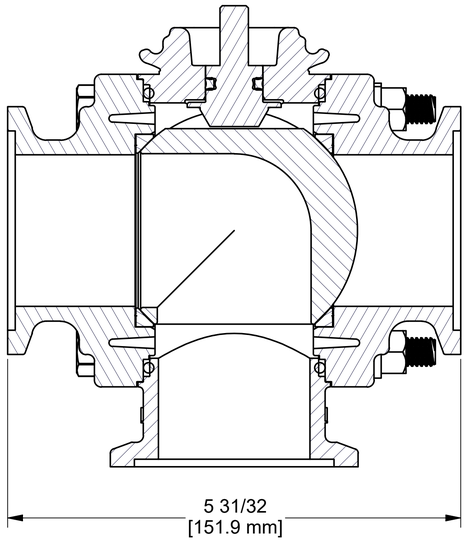

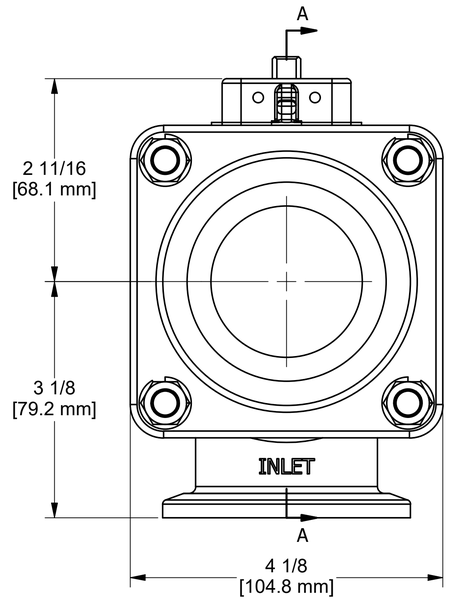

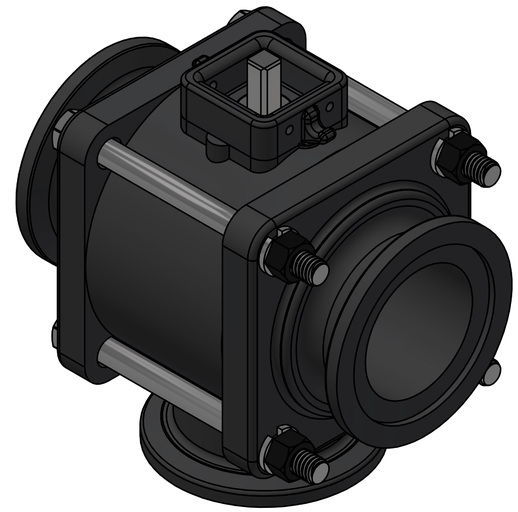

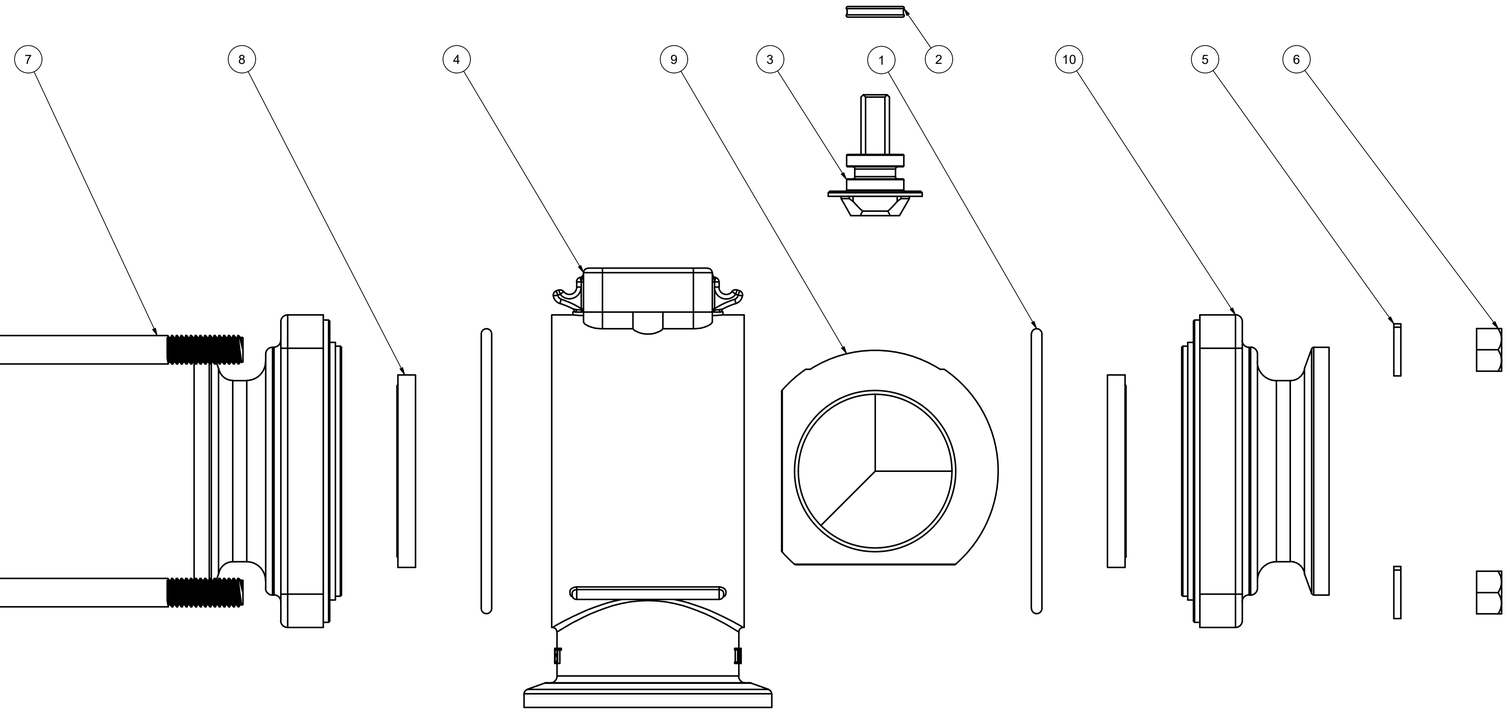

THIS DRAWING AND ALL INFORMATION CONTAINED THEREON ARE THE EXCLUSIVE PROPERTY OF BANJO CORPORATION.

UNLESS SPECIFICALLY NOTED, THIS DRAWING AND ITEMS SHOWN ON THIS DRAWING ARE SUBJECT TO CHANGE AT ANY TIME.

BANJO CORPORATION

BANJO CORPORATION
150 BANJO DRIVE, CRAWFORDSVILLE, IN 47933
WEB SITE: WWW.BANJOCORP.COM
E-MAIL: BANJOSALES@IDEXCORP.COM

DESCRIPTION

MEVX 2" FP BL, VALVE ONLY

PART NUMBER

MEVX220BLX