

WIRING:
RED = +12VDC
BLACK = GND
WHITE = +12VDC (OPEN), 0VDC (CLOSE)
GREEN = +12VDC FEEDBACK (OPEN)
BROWN = +12VDC FEEDBACK (CLOSED)

WIRE LENGTH: 18" ± 1"

Parts List

ITEM	QTY	PART NUMBER	DESCRIPTION
1	1	EP31B10513	EVX ACT 1.5S WWC 5W OP/CL-VFY
2	1	EVP20001	EV U-PIN
3	1	MEVX220BLX	2" FP BL EVX VALVE ONLY

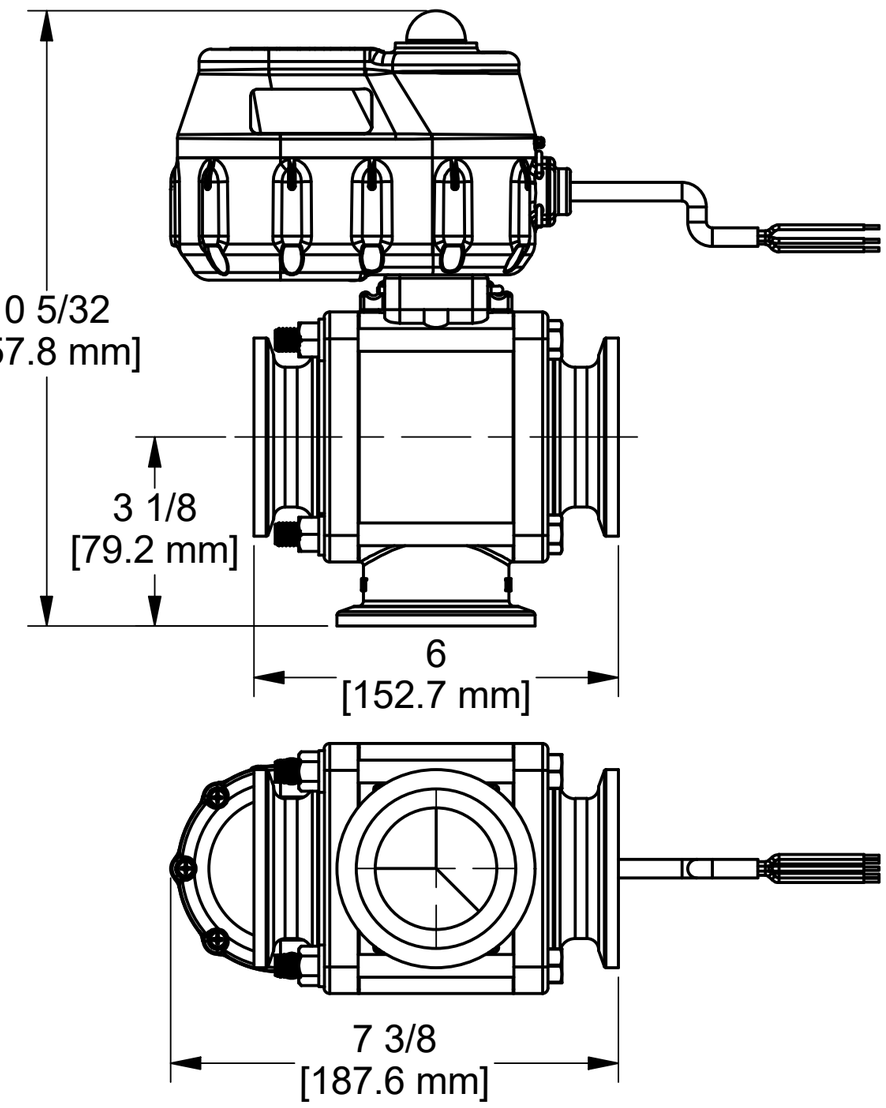

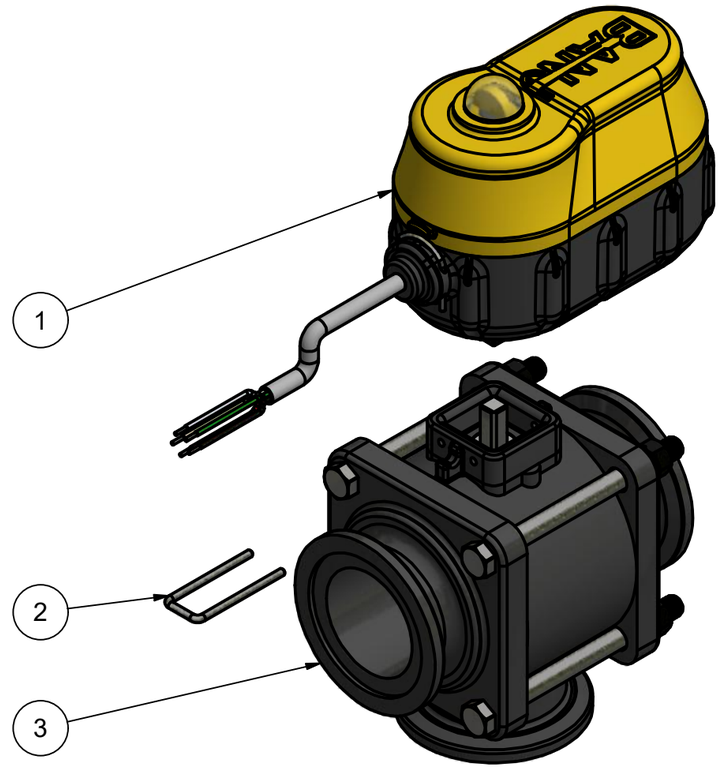

BANJO CORPORATION

THIS DRAWING AND ALL INFORMATION CONTAINED THEREON ARE THE EXCLUSIVE PROPERTY OF BANJO CORPORATION.

UNLESS SPECIFICALLY NOTED, THIS DRAWING AND ITEMS SHOWN ON THIS DRAWING ARE SUBJECT TO CHANGE AT ANY TIME.

BANJO CORPORATION
150 BANJO DRIVE, CRAWFORDSVILLE, IN 47933
WEB SITE: WWW.BANJOCORP.COM
E-MAIL: BANJOSALES@IDEXCORP.COM

DESCRIPTION
MEVX 2"FP 1.5S WWC 5W OP/CL VERIFY

PART NUMBER
MEVX220BLF3